Multifunctionality and non-agricultural supply of public goods

Tristan LE COTTY, Inra Lameta

Tancrède VOITURIEZ, Cirad amis ecopol UMR CNRS 8568

Paper submitted to the 25th International Conference of Agricultural Economists,
IAAE, Durban (South Africa), 16-22 August 2003.

Contact person : Tristan Le Cotty

INRA-LAMETA, 2 place Viala - 34060 Montpellier, France

Tel. 33 4 99 61 31 24, tristan.lecotty@ensam.inra.fr

Multifunctionality and non-agricultural supply of public goods

Abstract

When public goods are joint outputs of agricultural production, there is a trade-off between agricultural and non-agricultural provision of the public good. The principle of minimal price distortion in the reform of agricultural policies has led to a theoretical recommendation that public goods, if under-provided at agricultural free market level, should be promoted through non agricultural policies instead of agricultural policies. We show that the economies of scope between the agricultural production and the joint public good play a key role in determining the optimal way of providing this latter. If the policy designed is a non-agricultural policy, the production cost of the public good is higher than with an agricultural policy. If the policy designed is an agricultural policy, the production cost is lower but generates marginally increasing deadweight losses. Under the assumption of strictly positive economies of scope, we show that the optimal policy is a mix of agricultural and non-agricultural policy. We confirm this result in the two-country case, demonstrating the optimal level of agricultural support for public good provision is strictly positive and lower than in the case of one country.

KEYWORDS : multifunctionality, jointness, coupled support, protectionism, public good

1. Introduction

Multifunctionality is defined as the set of public goods produced jointly with agricultural output. An efficient role for public policy is then to ensure optimal provision of public good, either through direct remuneration of public good production, or through agricultural support, so that private cost equals social cost.

According to OCDE (2000), agricultural support is not justified as long as it remains possible to produce the public good out of the agricultural sector. The case when agriculture is more performing than the non-agricultural sector in providing for public good is much less documented. We give an analytic description of such a case. First we identify jointness with economies of scope between the agricultural output and the public good. Then we compare welfare effects of non-agricultural policy and agricultural policy, in the form of output subsidy, in one-country and two-country cases. We demonstrate that the optimal policy is a mix of non agricultural subsidy and coupled support, and that optimal policy is always distinct from free trade.

2. Agricultural and non-agricultural supply of a public good

The concept of jointness is used here to describe the relationship between an agricultural output and a public good. We consider the case where the public good is an externality of the agricultural output (y). Output level (y) determines thus the public good production level (z). An example can be given by biodiversity preservation induced by extensive breeding. We shall write z(y) the level of public good achieved through agricultural output y.

Moreover we assume economies of scope between the public good and the agricultural production. Referring to the standard definition of economies of scope in the multi-commodities case (see Dupraz, 1996), we define economies of scope between y and z as the cost gains achieved when a same vector of output (y) can be produced within one production unit instead of two :

$$C(y,0)+C(0,z)>C(y,z) \qquad [1]$$

with C the cost function. The value EG of economies of scope is given by :

$$EG(y,z)=\frac{C(y,0)+C(0,z)-C(y,z)}{C(y,z)} \qquad [2]$$

To quantify economies of scope between the agricultural output and the public good, we assign the marginal cost g(z) to the production of the public good out of the agricultural sector. We can assess then the consequences of jointness on the efficiency of agricultural output subsidy and non-agricultural subsidy in providing for public good.

Case (1) : Optimal agricultural policy with no environmental policy

Let us assume the case of suckler cow breeding on permanent prairie, generating environmental services like the preservation of biodiversity. Suckler cows graze grassland, perpetuating favourable conditions for the development of vegetable species of ecological interest, while grassland provides suckler cows with fodder (Plantureux, 1996). Vegetal biodiversity from extensive breeding is considered as a local public good after Samuelson's definition of non-rivalry and non-excludability. We assume that willingness to pay exists among taxpayers for this public good. Economies of scope between agricultural production and biodiversity are positive[1]. Plantureux showed that above a certain level of intensification, beef breeding has a negative impact on biodiversity. We assume therefore that we stay below such a level, where jointness remains positive.

The farmer is supposed to be the only possible supplier of the public good "biodiversity". The public good supplied z is an increasing function of y : z'(y)>0.

When there is neither agricultural nor environmental policies, z derives from producer maximisation behaviour for the production of the tradable output y. z does not interfere with farmer's objective function and constraints, and is completely determined by beef and inputs market equilibrium prices (y*, z(y*)).

Following Oecd (2000c), we represent on graph 1 the effects of a subsidy s per unit of beef on biodiversity. We write y^s the total amount of beef supplied with the subsidy s and z^s the level of biodiversity achieved then.

The coupled support s has two simultaneous and opposite effects. It raises residents utility u(z) of a marginal and decreasing amount HI, while reducing welfare on the beef market because of the deadweight loss ABC, which is marginally increasing (BC). Let L(y) be such a deadweight loss, equivalent to ABC triangle. We have L(y*)=0 and $L'(y^s)$=BC. Supply-demand equilibrium after subsidy imposes L'(y)=s. Thus when s increases, the marginal welfare loss on beef market increases of a value s. Inversely, the marginal public gain (HI) induced by s decreases. Consequently, there exists an optimal subsidy on beef is such as BC = HI.

[1] Economies of scope can be interpreted as cost economies in case of a multi-output production function (Sakai, 1974), where one of the outputs is a public good. For every agricultural output level y(p,w), there exists a scope of public good production levels depending on the payment received for the public good production z(p,w) per se, where p and w are output and input price vectors. Jointness is defined as the magnitude of cost complementarity between private (y_s) and public (y_t) output such as : $\frac{\partial^2 C(y,w)}{\partial y_s \partial y_t} \leq 0 \quad ; \forall s \neq t$. Economies of scope can arise from the fact that the land is a non allocatable factor (see Dupraz, 1996) between beef production (the private good) and grassland biodiversity (the public good). It is therefore cheaper for a breeder to produce this type of biodiversity than it is for a non-breeder.

Graph 1. Jointness and coupled support

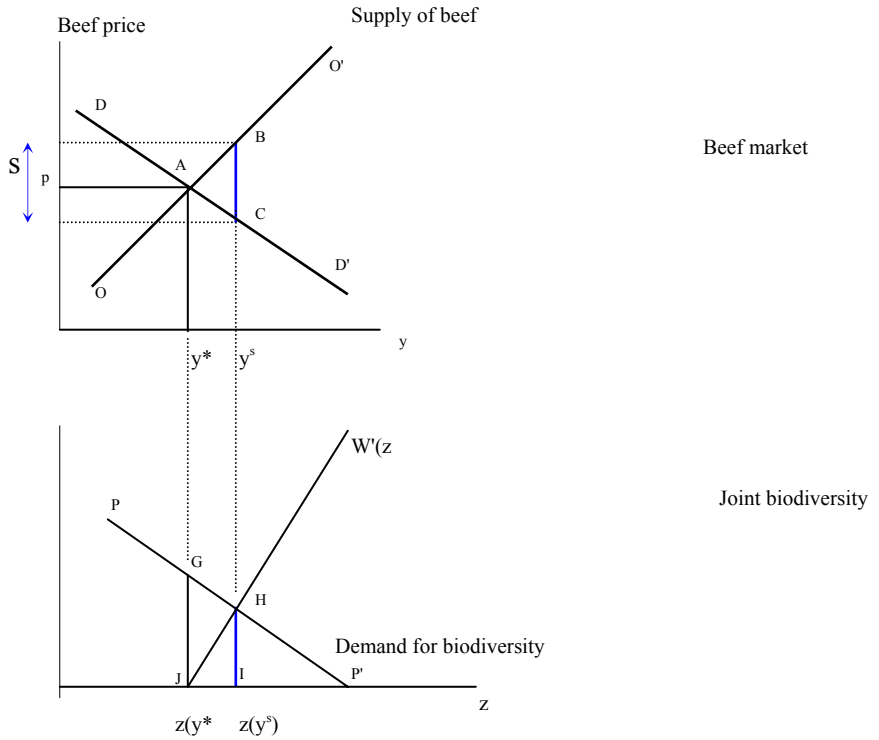

Surplus changes after subsidy :
Beef : - ABC
Public good : GHIJ
Global welfare : GHJ

To deduce the optimal subsidy level s°, we formalise L(y) as a function of z on the lower part of graph 1. We write $\mathsf{L}(y) = \mathsf{W}(z)$, hence $\mathsf{L}'(y) = \mathsf{W}'(z) \cdot \frac{dz}{dy}$. The term W′(z) is the marginal deadweight loss expressed in public good terms.

Optimum is reached when $W'(z)$ equalises the marginal willingness to pay of the public good HI. Beyond this point, the loss incurred on beef market is greater than the marginal gain of biodiversity. The optimal subsidy s° is such as :

$$\mathsf{L}'(y) = \mathsf{W}'(z) \cdot \frac{dz}{dy} = u'_z \qquad [3]$$

where u'_z is resident's marginal utility.

Result 1 : Our formalisation reproduces the main conclusions of environmental analysis, namely that coupled income support is more efficient than decoupled support when the social cost of agricultural production is lower than private cost in the absence of any environmental policies (Anderson et Blackhurst, 1992; Corden, 1997).

Case (2) : optimal agricultural policy with non-agricultural supply of the public good

We assume now that there exists a supply of the public good out of the agricultural sector. This public good *can* be and is *not necessarily* produced as an externality to the agricultural production. Let us consider then an environmental – viz non-agricultural - policy targeted on the public good and no agricultural policy at all (graph 2). Beef market equilibrium is left unchanged (y*) while

public good production is efficient (z_e). Non-agricultural supply of the public good generates the amount (z_e - z*) of public good at the marginal and constant cost g(z) = p_b. The agricultural sector supplies z* for free.

Welfare gains from the environmental policy are GNK. One cannot assert that environmental policy is systematically more efficient than agricultural policy[2]. The environmental policy goes further in satisfying demand for public good. It does not induce any deadweight losses on beef market. But its drawback is that it does not make society benefit from economies of scope that exist in the agricultural sector.

It is possible indeed to achieve greater efficiency by combining non-agricultural policy and agricultural policy. Then optimal agricultural subsidy then is no more equal to resident's marginal utility, but equal to the marginal cost of public good production out of the agricultural sector.

As long as $W'(z) \leq g(z)$, viz. $L'(y) \leq g(z) \cdot \frac{dz}{dy}$ [4]

agricultural supply of public good is socially less costly than non-agricultural supply. Beyond right-hand side values, economies of scope are too small to make up for welfare losses on beef market.

Graph 2. Joint public good and environmental policy

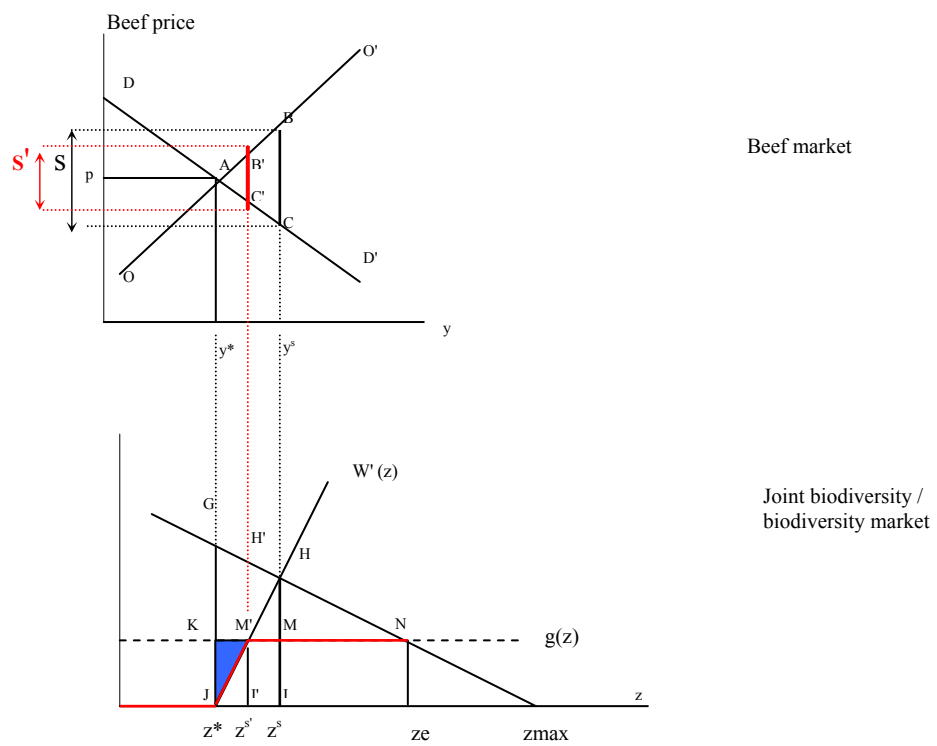

Without agricultural policy, welfare gains of non-agricultural supply of public good are GNK.
With coupled support and without non-agricultural sector, welfare gains are GHJ.
With coupled support combined with public good supply out of the agricultural sector, total welfare gains are GNM'J, greater than GNK.

In the case where 0<g(z)<HI, viz. as long as the non agricultural marginal cost of public good is lower than the marginal deadweight loss induced by agricultural policy for an output y^s (which is the optimal level without non-agricultural supply of public good) then optimum at national level requires S to be strictly positive, although lower than in case (1).

[2] "Agricultural policy" and "coupled support" are taken as synonyms throughout the paper.

The value of optimal agricultural subsidy S' is given by the equilibrium condition :

$$W'(z) = g(z)$$

Following [3] :

$$L'(y) = W'(z) \cdot \frac{dz}{dy}$$

We deduce S' such as :

$$L'(y) = g(z) \cdot \frac{dz}{dy} \qquad [5]$$

Public good supplied with by the agricultural sector is then $z^{s'}$, while (ze - $z^{s'}$) is produced by the non-agricultural sector.

Result 2 : When the non-agricultural supply of public good is made possible, a coupled support remains pareto-improving as long as exists jointness between the public good and the agricultural output. At optimum, the agricultural subsidy equals the non-agricultural marginal production cost of the public good.

3. Extra-territorial impacts

We assess in this section the changes induced by an efficient coupled support, in the case of jointness described above, on the welfare of partner countries. We consider beef trade between two countries, France (importer) and Argentina (exporter). Biodiversity is the public good joint to beef production in France. We assume marginal production costs for beef to be lower in Argentina than in France, beef quality to be the same in the two countries, and that no social demand for local biodiversity from pasture exists in Argentina - it only does in France, the importing country.

Policy options to preserve biodiversity are those considered in section 2.

- The French government finances the supply of biodiversity out of the agricultural sector and incurs welfare losses due to losses in economies of scopes. In this case, impacts on agricultural production in France and Argentina are nil. This policy, although generating no distortion on beef market, is not the optimal national policy : welfare losses are registered (yellow triangle on graph 3) compared to the situation of an optimal coupled support combined with an environmental policy.
- The French government sets an optimal coupled support in order to benefit from economies of scope. Although optimal at the national level, such a policy is not fair in Wto sense, for it has a protectionism, viz distorting effect on prices, as long as the France is a large beef importer (see Corden 1997).

Let J(y) be the international deadweight loss in France and Argentina. To deduce the optimal subsidy level S", we formalise J(y) as a function of z on the lower part of graph 2, as we did in section 2. We write $J(y) = M(z(y))$. Hence, $J'(y) = M'(z) \cdot \frac{dz}{dy}$.

M'(z) is the total total marginal welfare loss in Argentina and France beef markets. At free-trade world price level pm, M′(z*) = 0.

Graph 3. Extra-territorial effects of agricultural support

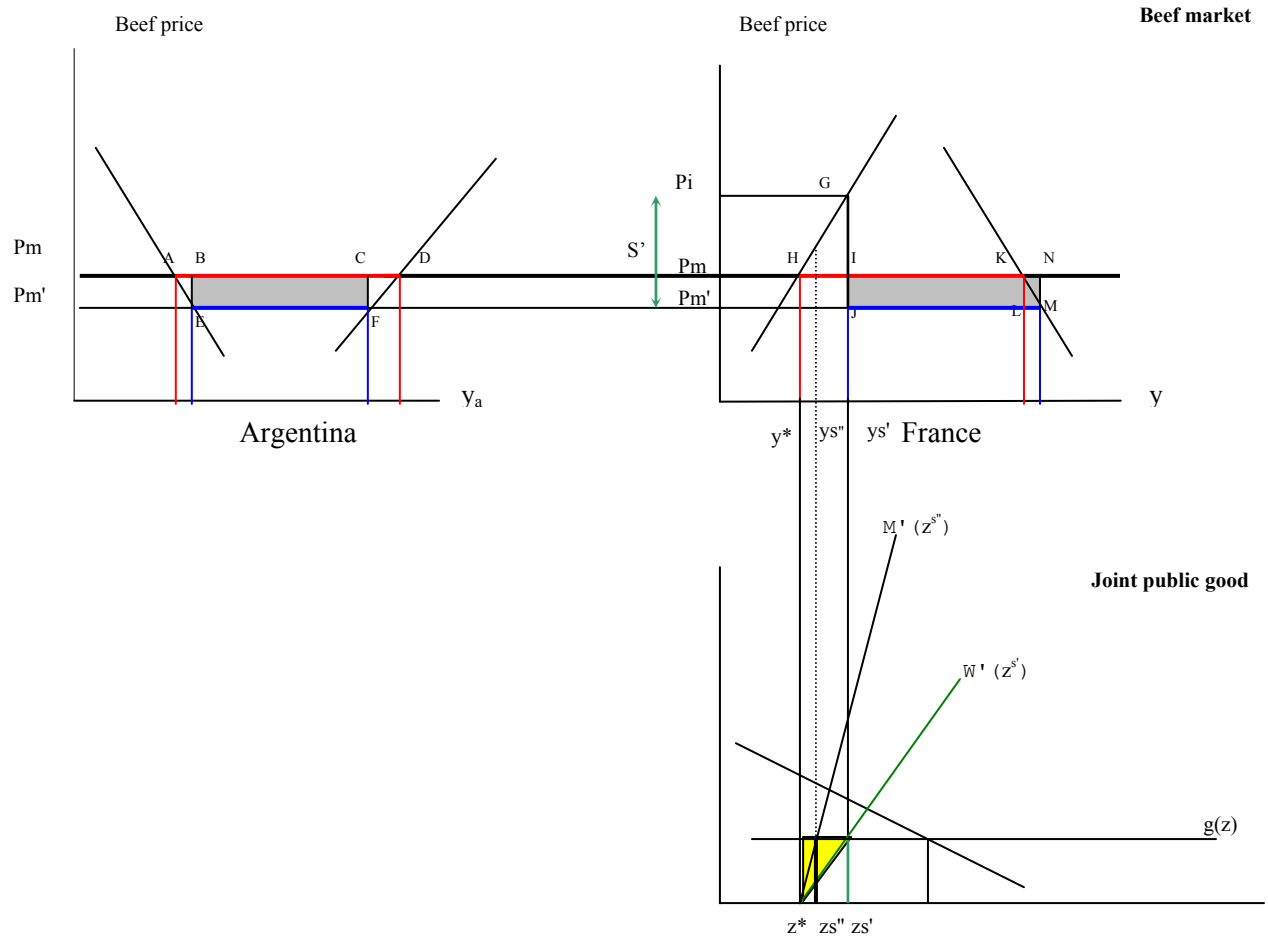

Beef subsidy in France has an uncertain impact on national welfare (IKMJ - GHI) because it leads to changes in world prices (terms of trade effect of a large importer). Effects on Argentina is always negative (ADFE). Because BCFE = IKLJ, global consequences of beef support in France is always negative : -ABE-CDF-GHI-KMN if we do not take into account the public good positive effects on the change in global welfare.

M'(z) equals -ABE -CDF -GHI –KMN on graph 2. M'(z) is increasing in z for all z > z* because all of its components are decreasing in y for all y > y*. At last, because we assume $\frac{dz}{dy}$ >0 for all y > y*, it follows that $M'(z)\cdot\frac{dz}{dy}$ is an increasing function. The value of optimal agricultural subsidy S' is given by the equilibrium condition : M'(z) = *g(z)*

Following [3] et [5] we deduce the optimal agricultural subsidy s" taking into account welfare effects in both Argentina and France. S" is such as :

$$J'(y) = M'(z)\cdot\frac{dz}{dy} = g(z)\cdot\frac{dz}{dy}$$

At last, we prove that J'(y) is greater than L'(y) :

- In the case of a closed economy, we have L'*(y)* = BC = s'
- In the two-country case, J'*(y)* = GI + NM + BE + CF = (pi - pm) + (pm - pm') + 2.(pm-pm') = pi + 2.pm -3.pm' = s"

Because pi - pm'=s', it follows that J'*(y)* =s+2(pm-pm'), hence 0<s"<s'.

Result 3

In the two-country case, the optimal agricultural subsidy once extra-territorial effects have been taken into account remains strictly positive and lower than in the case of a one-country, closed economy.

4. Conclusion

We show in this article that when a non-agricultural supply of public good is made possible, a coupled support can remain pareto-improving as long as jointness between the public good and the agricultural output leads to economies of scope greater than the market deadweight. At equilibrium, the agricultural subsidy equals the non-agricultural marginal production cost of the public good.

We show further that in the two-country case, the optimal agricultural subsidy once extra-territorial effects have been taken into account remains strictly positive, but is lower than in the case of a one-country, closed economy.

We draw three consequences on policy design :

1. Because of economies of scope, OECD (2000) recommendation of targeting support on the production in such a way as the public policy has the least distortive effect on agricultural production does not apply. Coupled support combined with environmental policy is pareto improving compared with the case where an environmental policy is set only.

2. Protectionism that could help enhance multifunctionality in a given country may generate a net cumulative welfare that exceeds the level created through free trade. However, unlike free trade which theoretically creates winners only, "multifunctional" protectionism creates both winners and losers in comparison with free-trade. Net cumulative welfare may be positive while domestic welfare is declining in one country.

3. For both importing and exporting countries, the nationally optimal policy differs from the policy maximizing global welfare. This latter includes a certain level of agricultural support in the multifunctional importing country that would partly internalise the term of trade effect of the agricultural policy. The rest of the public good should be produced through the non agricultural sector until global optimum is reached. This discrepancy between national and global optima leaves open the question of incentives to cooperate at multilateral level in presence of local public goods.

References

Anderson K. and R. Blackhurst (eds), 1992. Commerce mondial et environnement. Londres, Royaum-Uni, Harvester Wheatsheaf. Traduction française par Economica., 338 p.

Bagwell K. and R. W. Staiger, 1999. *An economic theory of GATT*. The American Economic Review, mars 1999, 89 (1), pp. 215-248

Corden W. M., 1997. Trade Policy and Economic Welfare. Second Edition, The Johns Hopkins University. Oxford University press.

Dupraz P., 1996. La gestion des inputs quasi-publics en agriculture : le cas des exploitations porcines et céréalières. Thèse pour le doctorat en sciences économiques, EHESS, juin 1996, 325p.

OECD, 2000*c*. The Production Relationships Underlying Multifunctionality. 17 février 2000. 40p. réf. [COM/AGR/APM/TD/WP(2000)3/PART2].

Plantureux S., 1996. Biodiversité, type de sol et intensité de l'exploitation des prairies permanentes du plateau lorrain. Acta Bot. Gallica, 143 (4/5):403-410.

Sakai Y., 1974. *Substitution and expansion effects in production theory: the case of joint production*. Journal of Economic Theory, 9 (1974):255-74.