Journal of Nematology 28(4):422–430. 1996.

Molecular and Biochemical Diversity Among Isolates of *Radopholus* spp. from Different Areas of the World

G. A. Fallas,[1] M. L. Hahn,[2] M. Fargette,[1] P. R. Burrows,[2] J. L. Sarah[1,3]

Abstract: Eleven isolates of *Radopholus similis* from various banana-growing areas around the world and one isolate of *R. bridgei* from turmeric in Indonesia were compared using DNA and isoenzyme analysis. The polymerase chain reaction (PCR) was used to amplify a fragment of ribosomal DNA (rDNA), comprising the two internal transcribed spacers (ITS) and the 5.8S gene. Restriction fragment length polymorphisms (RFLPs) in this rDNA fragment were used to compare the 10 isolates. The analysis of this rDNA region revealed little variation among the isolates tested. However, data also were obtained by random amplified polymorphic DNA (RAPD) analysis of total DNA, and a hierarchical cluster analysis of these data arranged the *R. similis* isolates into two clusters. The first cluster consisted of isolates from Nigeria, Cameroon, Queensland, and Costa Rica; the second was comprised of isolates from Guinea, Guadeloupe, the Ivory Coast, Uganda, and Sri Lanka. The isolate of *R. bridgei* from turmeric in Indonesia appeared to be more divergent. This grouping was consistent with that obtained when phosphate glucose isomerase (PGI) isoenzyme patterns were used to compare the *R. similis* isolates. The results from both RAPD analysis and PGI isoenzyme studies indicate that two gene pools might exist within the *R. similis* isolates studied. No correlation could be detected between the genomic diversity as determined by RAPD analysis and either geographic distribution of the isolates or differences in their pathogenicity. The results support the hypothesis that *R. similis* isolates have been spread with banana-planting material.

Key words: biochemical systematics, biodiversity, burrowing nematode, isoenzyme, PCR, *Radopholus similis,* RAPD, rDNA, RFLP.

Apparent biodiversity exists among isolates of the burrowing nematode, *Radopholus similis* (Cobb, 1893) Thorne, 1949, from different geographic origins as revealed by differences in pathogenicity (7,12,19) and in vitro reproductive fitness (6). Since the agricultural problems associated with burrowing nematode infestations are strongly influenced by the relative pathogenicity and host range of particular nematode isolates, there is a need to assess the diversity of *R. similis* as fully as possible in order to facilitate the development of integrated control schemes.

Electrophoretic analysis of enzymes has been used for identification and characterization of plant-parasitic nematodes (10). Recently, molecular biological methods, based on the polymerase chain reaction (PCR), also have been applied to the identification and differentiation of plant-parasitic nematodes. Approaches such as the use of random amplified polymorphic DNA (RAPD) analysis (3,14,15,17,23) and the specific amplification of fragments of the ribosomal DNA (rDNA) cistron (4,8, 13,14,22) have been applied successfully to practical problems in phytonematology.

The aim of this study was to assess the diversity between 11 isolates of *R. similis* and one isolate of *R. bridgei* using biochemical and molecular methods. An attempt was made to correlate geographic origin of the isolates with apparent genomic or biochemical similarity.

Materials and Methods

Nematode Cultures: DNA studies involved 10 *Radopholus* isolates. Nine of these were originally extracted from roots of banana plants (*Musa* AAA) in Uganda (Labbubbo, Kyadondo), Nigeria (Port Harcourt), the Ivory Coast (Anguédédou), Cameroon (Island 5, Sanaga River), Guinea (Balikoure), Costa Rica (Talamanca), Guadeloupe (Neufchâteau), Queensland (Mac Kay State), and Sri Lanka (Hantane), and have

Received for publication 11 August 1995.
[1] Laboratoire de Nématologie CIRAD FLHOR—ORSTOM, BP 5035, 34032 Montpellier, Cedex, France.
[2] Entomology and Nematology Department, IACR-Rothamsted, Harpenden, Hertfordshire, AL5 2JQ, UK.
[3] Author to whom correspondence may be sent. The authors are grateful to the European Economic Community and the Natural Resources Institute for partly supporting this study (Contracts no. TS3*—CT92-0104, and X0196, respectively). We also thank D.T. Kaplan for recommendation of useful oligonucleotides for the RAPD analysis.
E-mail: sarah@cirad.fr.

been identified by morphology as *R. similis* (M. R. Siddiqi, pers. comm.). The 10th isolate, collected from turmeric (*Curcuma zedoaria*) in East Java, Indonesia, is morphologically different from *R. similis* and has recently been described as a new species, *R. bridgei* (20). All *R. similis* isolates were maintained in the laboratory in monoxenic culture at 27°C (±0.5°C) on carrot discs (5,16). For extraction, nematodes were rinsed from culture jar walls aseptically with sterile distilled water and pelleted by centrifugation. Nematodes were either used immediately for DNA extraction or stored in a minimal volume of sterile distilled water at −80°C. The isolate of *R. bridgei* was cultured on excised maize roots, and nematodes were recovered as described previously (11).

For isoenzyme studies, the *R. bridgei* isolate was not included, and two *R. similis* isolates collected from banana roots in Martinique (Morne Rouge) and Kenya (Ogembo, Oyugis) were included in addition to the isolates listed above. Nematodes were pelleted by centrifugation and stored in sterile distilled water at −20°C.

DNA extraction: DNA from the 10 nematode isolates was extracted as follows: standard 3-μl pellets of packed nematodes (approximately 4,000 juveniles and adults) were transferred to micro-homogenizer tubes (BioMedix: 2 West Avenue, Pinner, HA5 5BY, U.K.) and 7 μl of lysis buffer (2) was added per pellet. The nematodes were homogenized for 15 seconds followed by centrifugation at 2,000*g* for 5 seconds. Supernatants were transferred to sterile 0.5-ml Eppendorf tubes. For each sample, the pellet was resuspended in 10 μl lysis buffer and then homogenized and centrifuged as before. The supernatants and the pellet were mixed, and the capped tube was placed in a 95°C heating block for 3 minutes. Finally, the samples were centrifuged for 8 minutes at 14,000*g*, and 17 μl of supernatant was collected and stored at −45°C.

Amplification of the 5.8S/ITS region of ribosomal DNA and RFLP analysis: The fragment of the ribosomal DNA (rDNA) comprising the two internal transcribed spacers (ITS) and the 5.8S gene was amplified by the polymerase chain reaction (PCR) using primers based on conserved sequences in the 18S and 26S rDNA genes of *Caenorhabditis elegans* (9). The primer sequences were as in Vrain et al (22):

18S primer-
5′ TTGATTACGTCCCTGCCCTTT 3′
26S primer-
3′ GGAATCATTGCCGCTCACTTT 5′.

Radopholus DNA (0.2 μl of crude extract-see above) and *Globodera rostochiensis* DNA, which was used as a positive control, were amplified in 50-μl reaction volumes consisting of 10 mM Tris-HCl, pH 8.8, 50 mM KCl, 15 mM $MgCl_2$, 0.1% Triton X-100, 200 μM dNTPs, 30 pM each primer, and 2 U Taq DNA Polymerase (Stratagene). Amplification conditions were as follows: 1 cycle of 3 minutes at 94°C, 1 minute at 55°C, 1 minute at 72°C; 38 cycles of 1 minute at 94°C, 1 minute at 55°C, 1 minute at 72°C; finally, 1 cycle of 1 minute at 94°C, 1 minute at 55°C, and 5 minutes at 72°C (13).

Restriction digestions were carried out on 6 to 10 μl of the PCR reaction mixture containing the amplified rDNA product using each of six restriction enzymes: Hha I, Hpa II, Rsa I, Hae III, Taq I, and Alu I (Gibco Co., BRL). Reaction conditions were according to supplier's instructions. PCR products were resolved by electrophoresis through 1% agarose gels in 1× TBE buffer. DNA was stained with ethidium bromide, visualized on a UV transilluminator, and photographed with Polaroid Type 667 film. A 123 base pair ladder was used as a size marker.

Random amplified polymorphic DNA analysis: For each isolate, PCR reactions were always performed in duplicate using two different volumes (i.e., 0.1 μl and 0.2 μl) of crude DNA extract. *Radopholus* total DNA was amplified in a final volume of 25 μl. Reactions were prepared on ice and consisted of 10 mM TrisHCl (pH 8.8), 50 mM KCl, 1.5 mM $MgCl_2$, 0.001% gelatin, 20μM of each dNTP, 1 unit of Taq DNA Polymerase (Stratagene), and 20-25 pM of

TABLE 1. List of oligonucleotides used as primers in the RAPD analysis.

Primer sequence (5′ to 3′)	Source-Reference
CAGGCCCTTC	OPERON KIT[1] A code OPA-01
AGTCAGCCAC	OPERON KIT A code OPA-03
GAAACGGGTG	OPERON KIT A code OPA-07
CAATCGCCGT	OPERON KIT A code OPA-11
CTTCACCCGA	OPERON KIT E code OPE-09
ACGGCGTATG	OPERON KIT E code OPE-19
AACGGTGACC	OPERON KIT E code OPE-20
GTCTCCGCAA	OPERON KIT K code OPK-02
GGGACGTTGG	OPERON KIT M code OPM-12
GGGTGTGTAG	OPERON KIT T code OPT-12

[1] Operon Instruments Alameda, CA.

primer. Ten different primers were used (Table 1), some of them having proved to detect polymorphism in *Radopholus* spp (15). Amplification was done in a Hybaid OmniGene Thermo Cycler. PCR conditions were as follows: 2 minutes at 85°C; 41 cycles of 1 minute at 92°C, 1 minute at 35°C, 1 minute at 72°C, with the final cycle remaining at 72°C for 7 minutes (11). RAPD products were resolved by electrophoresis through 1.3% agarose (Sea Kem GTG FMC) gels in 1× TAE buffer. DNA was stained, visualized, and photographed as above. A 123 base pair ladder was used as a size marker.

Genetic data analysis: RAPD bands were scored for each primer as present (1) or absent (0), and only DNA bands unambiguously present in both duplicates were included in the data analysis. Fragments that appeared to be the same molecular size were assumed to represent the same genomic locus due to the mainly intraspecific nature of the present study. The simple matching coefficient was used to calculate a similarity matrix. The matrix was used to perform hierarchical cluster analysis based on the unweighted pair-group method using arithmetic averages (UPGMA) (21). Cluster analysis on all RAPD data was done using 'Genstat' statistical software (18).

Isoenzyme analysis: Pellets of 10,000 nematodes (juveniles and adults) were ground twice for 15 seconds in a microhomogenizer tube (BioMedix) containing 40 μl of 1% glycine. Each sample was centrifuged at 2,000g for 5 seconds between homogenizations. Supernatant was then centrifuged at 14,000g for 5 minutes and 10-μl samples taken from the top of the supernatant and placed on the isoelectric focusing mask. Proteins were separated by isoelectric focusing in ultrathin layer (0.15 mm thick) polyacrylamide gels, pH 3-10 (Servalyt Precotes, 125 × 125 mm, SERVA: 7 Carl-Benz Str., D-6900 Heidelberg, Denmark) according to manufacturer recommendations. Electrofocusing was carried out at 4°C using a Multiphor II apparatus (Pharmacia Biotech, France). The current was adjusted to deliver an initial voltage of 200. Running time for gels was 2 to 3 hours. PGI activity was detected using the staining procedure described in Allendorf et al. (1).

RESULTS

Amplification of the rDNA fragment and RFLP analysis: The amplification of the 5.8 rDNA gene and flanking ITS spacer regions of each *Radopholus* isolate yielded one fragment of approximately 0.92 kilobases (Kb) (Fig. 1A, lanes a–j). The positive control DNA of *Globodera rostochiensis* (Fig. 1A, lane k) showed a fragment of approximately 1.23 Kb, and the negative control (without template DNA; Fig. 1A, lane l) gave no amplification products. In general, digestions of the 0.92Kb rDNA fragment with each of six restriction enzymes revealed little variation between the *R. similis* isolates. Some differences between isolates were observed with two enzymes: Alu I and Hae III. With Alu I additional restriction fragments of 0.55 Kb and 0.70 Kb were present in the isolates from Costa Rica and Uganda (Fig. 1D, lanes h and f, respectively), while after digestion with Hae III an additional restriction fragment of 0.65 Kb was present in the isolates from Guinea and the Ivory Coast (Fig 1E, lanes b and d). No differences in size and number of restriction fragments were obtained with Hha I and Hpa II (data not shown).

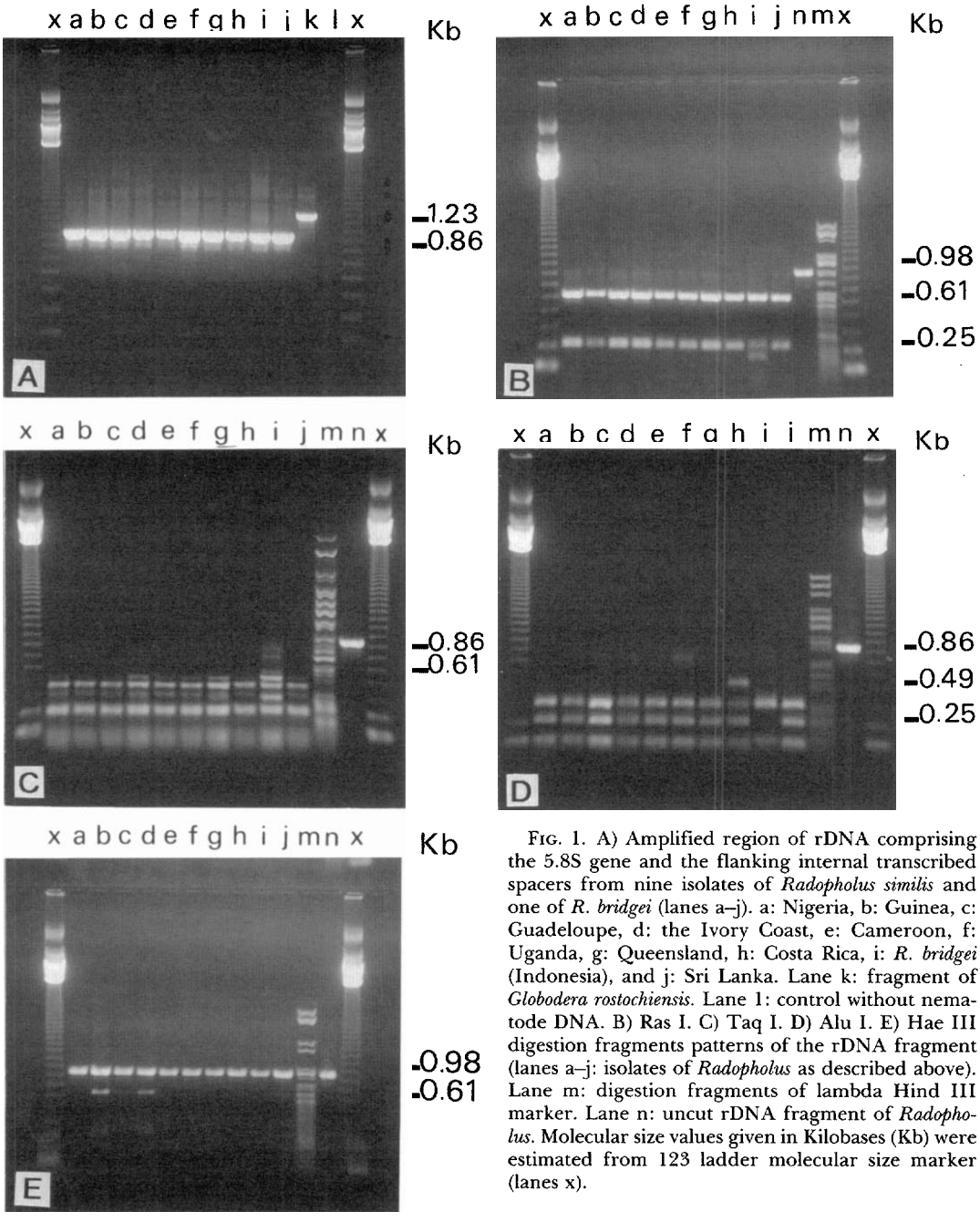

FIG. 1. A) Amplified region of rDNA comprising the 5.8S gene and the flanking internal transcribed spacers from nine isolates of *Radopholus similis* and one of *R. bridgei* (lanes a–j). a: Nigeria, b: Guinea, c: Guadeloupe, d: the Ivory Coast, e: Cameroon, f: Uganda, g: Queensland, h: Costa Rica, i: *R. bridgei* (Indonesia), and j: Sri Lanka. Lane k: fragment of *Globodera rostochiensis*. Lane l: control without nematode DNA. B) Ras I. C) Taq I. D) Alu I. E) Hae III digestion fragments patterns of the rDNA fragment (lanes a–j: isolates of *Radopholus* as described above). Lane m: digestion fragments of lambda Hind III marker. Lane n: uncut rDNA fragment of *Radopholus*. Molecular size values given in Kilobases (Kb) were estimated from 123 ladder molecular size marker (lanes x).

The isolate of *R. bridgei* could be differentiated from the burrowing nematode isolates using three of the six restriction enzymes: Rsa I, Taq I, and Alu I (Figs. 1B, 1C, and ID; lane i). Digestion of the rDNA fragment with Rsa I (Fig. 1B) yielded one additional band of approximately 0.20 Kb, while Taq I resulted in some additional restriction fragments (Fig. 1C). In contrast, a fragment of 0.25 Kb generated by digestion with Alu I was present only in the *R. similis* isolates (Fig. 1D, lanes a–h,j).

RAPD analysis: The RAPD profiles generated in this study readily allowed the interspecific separation of *R. bridgei* and *R. similis* and intraspecific differentiation of

all of the *R. similis* isolates. Three of the 10 RAPD profiles produced are shown in Fig. 2. Primer OPA-07 (Fig. 2A) yielded five main bands from DNA of the *R. bridgei* isolate (i) that ranged in size from approximately 0.70 Kb to 2.46 Kb. All the isolates of *R. similis* (Fig 2A, lanes a–h,j) yielded two main RAPD fragments, one of 1.0 Kb and another of 1.40 Kb. However, only the isolates from Nigeria (a), Cameroon (e), Queensland (g), and Costa Rica (h) yielded an additional band of 2.46 Kb that also appeared to be present in *R. bridgei* (i). Separation of the same four *R. similis* isolates was also possible with primers OPA-20 and OPT-12 (Figs. 2B and 2C). Here, these isolates (Nigeria, Cameroon, Queensland, and Costa Rica) were found to have RAPD bands of 1.30 Kb (Fig. 2B) and 0.98 Kb (Fig. 2C) not observed in the other isolates. Primer OPA-20 (Fig. 2B) yielded a band of 1.54 Kb that was present in all the isolates except *R. bridgei* (i). Interestingly, this primer also generated a fragment of approximately 2.1 Kb that was found only in the isolate from Nigeria (Fig. 2B, lane a). The isolates from Nigeria (a) and Cameroon (e) revealed two fragments of 1.54 Kb and 2.21 Kb not found in any of the other isolates. Primer OPT-12 also generated two fragments, 1.80 Kb and 1.90 Kb, from the Guinea, Guadeloupe, Ivory Coast, Uganda, and Sri Lanka isolates (Fig. 2C, lanes b–d, f, j, respectively).

The hierarchical cluster analysis carried out on the RAPD data from this study was based on a total of 104 scorable RAPD bands generated by the 10 primers. The resultant similarity matrix (Fig. 3) was used to compile a dendrogram (Fig. 4). The analysis separated the *R. similis* isolates into two groups that were 75% similar to each other. The first group contained the isolates from Nigeria, Cameroon, Queens-

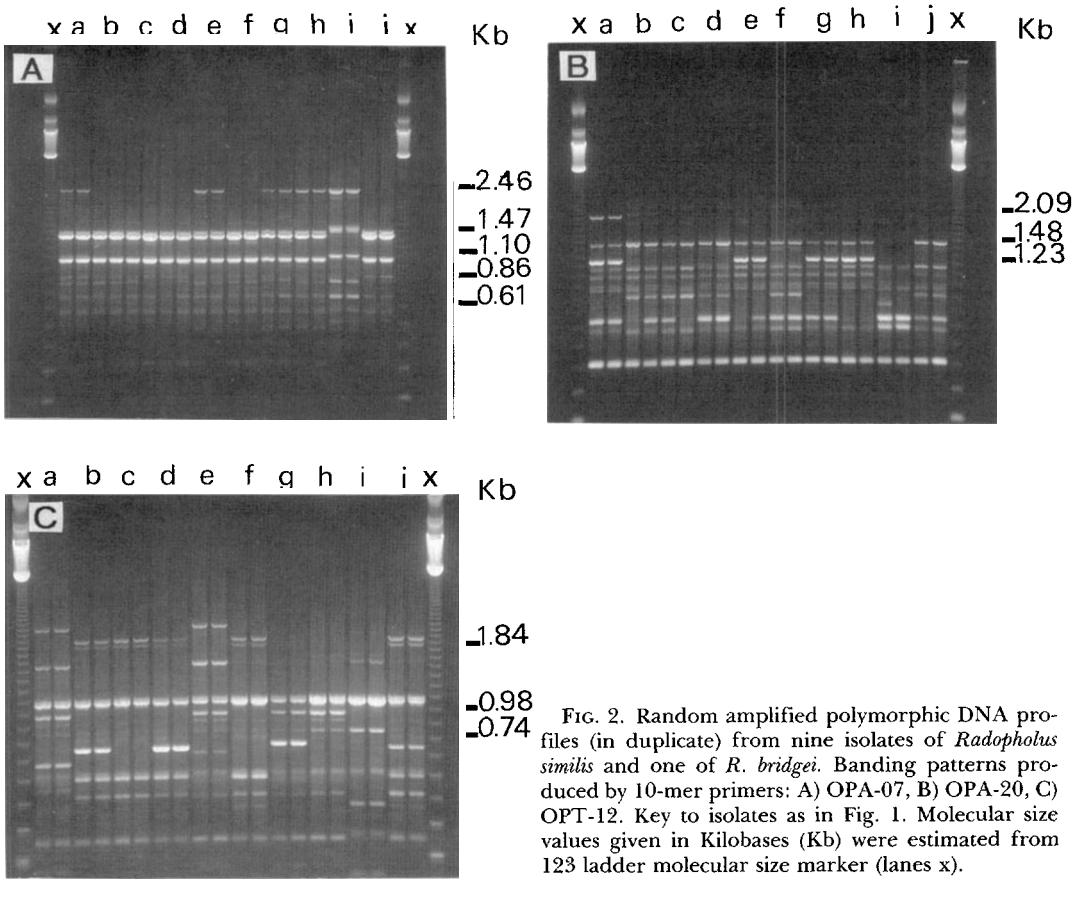

FIG. 2. Random amplified polymorphic DNA profiles (in duplicate) from nine isolates of *Radopholus similis* and one of *R. bridgei*. Banding patterns produced by 10-mer primers: A) OPA-07, B) OPA-20, C) OPT-12. Key to isolates as in Fig. 1. Molecular size values given in Kilobases (Kb) were estimated from 123 ladder molecular size marker (lanes x).

	NIG	GUI	GUA	IVC	CAM	UGA	QUE	COR	*R. bridgei*	SRL
NIG	-									
GUI	67.3	-								
GUA	70.1	97.2	-							
IVC	67.3	98.1	95.3	-						
CAM	95.3	70.1	72.9	70.1	-					
UGA	69.2	96.3	99.1	94.4	72.0	-				
QUE	84.1	81.3	80.4	81.3	86.9	79.4	-			
COR	88.8	78.5	81.3	78.5	91.6	80.4	95.3	-		
R. bridgei	37.4	30.8	31.8	32.7	38.3	32.7	32.7	37.4	-	
SRL	68.2	97.2	94.4	95.3	71.0	93.5	82.2	79.4	29.9	-

FIG. 3. Genomic similarity coefficient matrix of nine isolates of *Radopholus similis* and one of *R. bridgei* obtained from presence and absence of a total of 104 RAPD bands generated by the ten 10-met primers used. Matrix is based on the unweighted pair-group method using arithmetic averages (UPGMA). NIG: Nigeria, GUI: Guinea, GUA: Guadeloupe, IVC: Ivory Coast, CAM: Cameroon, UGA: Uganda, QUE: Queensland, COR: Costa Rica, and SRL: Sri Lanka.

land, and Costa Rica (Fig. 4 isolates a, e, g and h, respectively). The second group was comprised of the *R. similis* isolates from Guinea, Guadeloupe, the Ivory Coast, Uganda, and Sri Lanka (Fig. 4 isolates b–d, f, and j, respectively). The isolate of *R. bridgei* from turmeric in Indonesia (Fig. 4, isolate i) was only 33% similar to the *R. similis* isolates, based on these data.

Isoenzyme analysis: Isoenzyme analysis of PGI was repeated five times, and patterns proved to be stable. As shown in Fig. 5, the *R. similis* isolates collected from banana roots were separated into two distinct groups with very different PGI profiles. The first group, in which the PGI pattern of each member consisted of three bands, contained the isolates from Sri Lanka, Guinea, Guadeloupe, the Ivory Coast, and Uganda (Fig. 5, lanes a, c, e, g, and h). The second group contained the isolates from Nigeria, Cameroon, Queensland, Costa Rica, and Martinique (Fig. 5, lanes b, d, f, p, and m), and here the typical isozyme pattern consisted of two bands. The grouping of the isolates on the basis of PGI was consistent with the two groups differentiated by the RAPD analysis.

DISCUSSION

Although the rDNA 5.8S/ITS region has been used successfully to differentiate species and isolates of phytonematodes, the diagnostic value of this DNA fragment varies greatly with the particular nematode species being studied. Sequence diversity in this region, as determined by RFLP analysis, has been reported among isolates of *Xiphinema americanum* (22) and especially *Aphelenchoides* sp. (13), while in *Heterodera glycines* this region was found to be conserved (8). For *R. similis,* this particular region of rDNA might be too conserved to be of diagnostic value without direct DNA sequence comparison. This result confirms

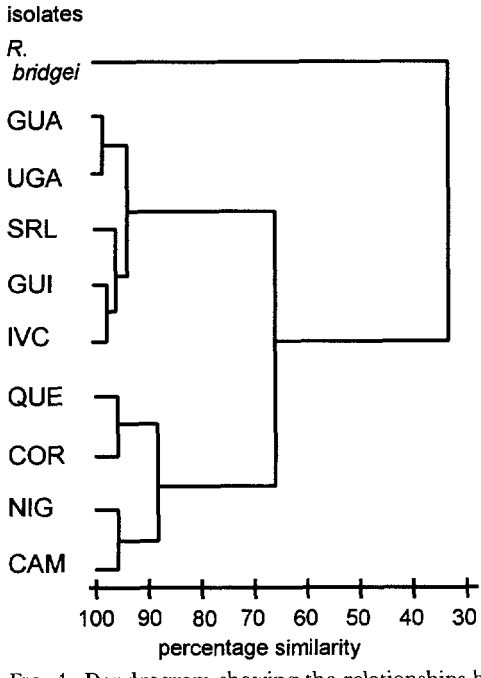

FIG. 4. Dendrogram showing the relationships between nine isolates of *Radopholus similis* and one of *R. bridgei*, generated from genomic similarity coefficients presented in Fig. 3. Codes to isolates as in Fig. 3.

previous studies carried out by Kaplan (14).

The level of genomic diversity among burrowing nematode isolates detected in this work by RAPD analysis is consistent with results obtained in recent studies (11,15). However, RAPD data and PGI analysis in the present study arranged the *R. similis* isolates into two groups, probably reflecting different gene pools. While Kaplan et al. (15) reported the presence of a RAPD band associated with citrus parasitism in some burrowing nematode populations from Florida, it is not yet clear if individual isolates of the groups established here share common biological or pathogenic characteristics. Actually, in both groups some isolates differ in their pathogenic characteristics. As an example, the isolates from Uganda and Sri Lanka have been shown to vary greatly in their reproductive fitness and pathogenicity on banana (7,12), yet they were arranged in the same group. In the second group, the isolates from Cameroon and Nigeria are much more pathogenic on bananas than the isolates from Queensland or Martinique (7,12).

Based on the cluster analysis, no correlation was found between geographic proximity of the original isolates and apparent genomic similarity. For example, African isolates are found in each of the two groupings as defined by RAPD and PGI analysis. Similar results have been reported with *Heterodera schachtii* isolates analysed by RAPD (3). However, the relationship between geographic origin and apparent molecular/biochemical similarity of the *Radopholus* isolates could perhaps be understood in relation to a simultaneous spread of the nematodes together with ba-

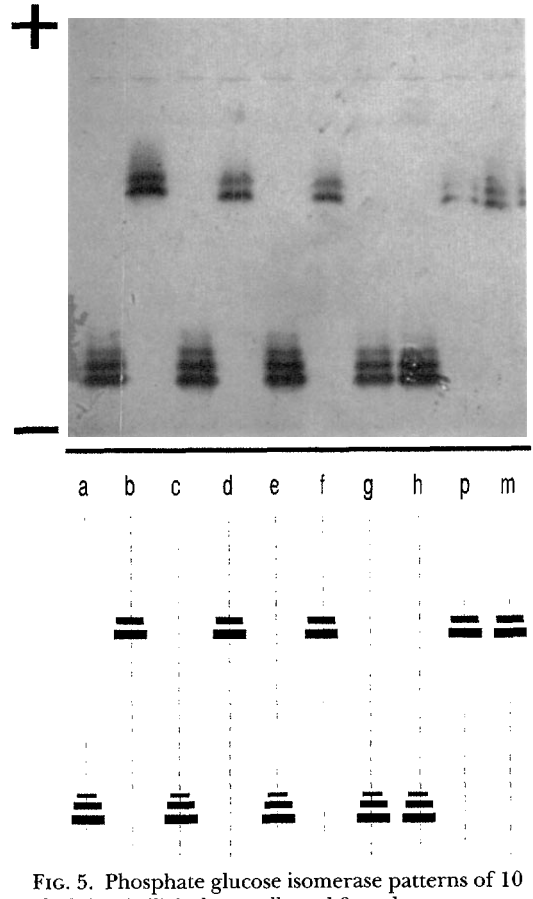

FIG. 5. Phosphate glucose isomerase patterns of 10 *Radopholus similis* isolates collected from banana roots. a: Sri Lanka, b: Nigeria, c: Guinea, d: Cameroon, e: Guadeloupe, f: Queensland, g: the Ivory Coast, h: Uganda, p: Costa Rica, m: Martinique.

nana-planting material. It is possible that *R. similis* was introduced into the Caribbean from West Africa (J. Bridge, pers. comm.). In our study, isolates from Cameroon and Nigeria are present in the same group, and although the isolate from Martinique was not included in the RAPD analysis, the PGI patterns of these three isolates were identical. This indicates strongly their possible close relatedness. In addition, based on both RAPD and PGI analysis, the two isolates from Guinea and the Ivory Coast appear to be similar. Interestingly, banana production in the Ivory Coast developed mainly in the late 1950s, when growers from Guinea left their country after independence and settled in the Ivory Coast, introducing their own planting material into the area. The similarity between the Guinea and Ivory Coast isolates is also revealed in the rDNA, as the enzyme *Hae* III generates an additional restriction fragment only in these two isolates (Fig. 1E). In contrast, the history of banana production in Cameroon, which has a common border with Nigeria, is completely separated from Guinea and the Ivory Coast; this is reflected in the grouping of the *R. similis* isolates from these countries. Detailed studies of the historical spread of banana plants may help our understanding of the geographic distribution of *R. similis* isolates.

The use of molecular and biochemical tools employed in this study, combined with host range and pathogenicity assays, should provide us with information essential for more successful control of burrowing nematodes.

Literature Cited

1. Allendorf, F. W., N. Mitchell, N. Ryman, and G. Stahl. 1977. Isoenzyme loci in brown trout (*Salmo trutta* L.): Detection and interpretation from population data. Hereditas 86:179–190.

2. Black, W. C., N. M. Duteau, G. J. Puterka, J. R. Nechols, and J. M. Pettorini. 1992. Use of the random amplified polymorphic DNA polymerase chain reaction (RAPD-PCR) to detect DNA polymorphisms in aphids (Homoptera: Aphididae). Bulletin of Entomological Research 82:151–159.

3. Caswell-Chen, E. P., V. M. Williamson, and F. F. Wu. 1992. Random amplified polymorphic DNA analysis of *Heterodera cruciferae* and *H. schachtii* populations. Journal of Nematology 24:343–351.

4. De Giorgi, C., S. M. Finetti, M. Di Vito, and F. Lamberti. 1992. A fragment of the large subunit of rDNA gene amplified by polymerase chain reaction in individual nematodes. Nematologia Mediterranea 20:149–152.

5. Fallas, G., and J. L. Sarah. 1994. Effect of storage temperature on the in vitro reproduction of *Radopholus similis*. Nematropica 24:175–177.

6. Fallas, G., and J. L. Sarah. 1995. Effect of temperature on in vitro multiplication of seven *Radopholus similis* isolates from different banana-producing zones of the world. Fundamental and Applied Nematology 18:445–449.

7. Fallas, G., J. L. Sarah, and M. Fargette. 1995. Reproductive fitness and pathogenicity of eight isolates of *Radopholus similis* on banana (cv. Poyo). Nematropica 25:135–141.

8. Ferris V. G., J. M. Ferris, and J. Faghihi. 1993. Variation in spacer ribosomal DNA in some cyst-forming species of plant-parasitic nematodes. Fundamental and Applied Nematology 16:177–184.

9. Files, J. G., and D. Hirsh. 1981. Ribosomal DNA of *Caenorhabditis elegans*. Journal of Molecular Biology 149:223–240.

10. Fox, P. C., and H. J. Atkinson. 1986. Recent developments in the biochemical taxonomy of plant-parasitic nematodes. Agricultural Zoological Reviews 1:301–331.

11. Hahn, M. L., P. R. Burrows, N. C. Gnanapragasam, J. Bridge, N. J. Vines, and D. J. Wright. 1994. Molecular diversity amongst *Radopholus similis* populations from Sri Lanka detected by RAPD analysis. Fundamental and Applied Nematology 17:275–281.

12. Hahn, M. L., J. L. Sarah, M. Boisseau, N. J. Vines, J. Bridge, D. J. Wright, and P. R. Burrows. 1996. Reproductive fitness and pathogenic potential of selected *Radopholus* populations on two banana cultivars. Plant Pathology 45:223–231.

13. Ibrahim, S. K., R. N. Perry, P. R. Burrows, and D. J. Hooper. 1994. Differentiation of species and populations of *Aphelenchoides* and of *Ditylenchus angustus* using a fragment of ribosomal DNA. Journal of Nematology 26:412–421.

14. Kaplan, D. T. 1994. Molecular characterization of the burrowing nematode sibling species, *Radopholus citrophilus* and *R. similis*. Pp. 77–83 *in* F. Lamberti, C. De Giorgi, and D. M. Bird, eds. Advances in molecular plant nematology. Plenum Press: New York.

15. Kaplan, D. T., M. C. Vanderspool, C. Garrett, S. Chang, and C. H. Opperman. 1996. Molecular polymorphism associated with host range in the highly conserved genomes of burrowing nematodes, *Radopholus spp.* Molecular Plant Microbe Interactions 9:32–38.

16. O'Bannon, J. H., and A. L. Taylor. 1968. Migratory endoparasitic nematodes reared on carrot discs. Phytopathology 58:385.

17. Pastrik, K. J., H. J. Rumpenhorst, and W. Burgermeister. 1995. Random amplified polymorphic DNA analysis of a *Globodera pallida* population

selected for virulence. Fundamental and Applied Nematology 18:109–114.

18. Payne, R. W., P. W. Lane, A. E. Ainsley, K. E. Bicknell, P. G. N. Digby, S. A. Harding, P. K., Leech, H. R. Simpson, A. D. Todd, P. J. Verrier, R. J. White, J. C. Gower, G. Tunnicliffe Wilson, and L. J. Patterson. 1987. Genstat 5 reference manual. Oxford, UK: Clarendon Press.

19. Sarah, J. L., C. Sabatini, and M. Boisseau. 1993. Differences in pathogenicity to banana (*Musa* sp., cv. Poyo) among isolates of *Radopholus similis* from different production areas of the world. Nematropica 23:75–79.

20. Siddiqi, M. R., and M. L. Hahn. 1995. *Radopholus bridgei* sp.n. (Tylenchida: Pratylenchidae) from Indonesia and its differentiation by morphological and molecular characters. Afro-Asian Journal of Nematology 5:38–43.

21. Sneath, P. H. A., and R. R. Sokal. 1973. Numerical taxonomy. San Francisco, CA: Freeman.

22. Vrain, T. C., D. A. Wakarchuk, A. C. Levesque, and R. I. Hamilton. 1992. Intraspecific rDNA restriction fragment length polymorphism in the *Xiphinema americanum* group. Fundamental and Applied Nematology 15:563–573.

23. Williams, J. G. K., A. R. Kubelik, K. J. Livak, J. A. Rafalski, and S. V. Tingey. 1990. DNA polymorphisms amplified by arbitrary primers are useful as genetic markers. Nucleic Acids Research 18:6531–6535.