# Variability results of homogenized cottons by a new laboratory homogenizing machine

Payet L., Gourlot J.- P., Azuara C.

ITMF, Bremen, March 2010

This project is co-funded by the European Union and the Common Fund for Commodities

# Plan of presentation

- Introduction
- Homogenizing machine description
- Effect of machine on mixed cottons
- Effect of machine on homogenized cotton
- Conclusion

This project is co-funded by
the European Union and the
Common Fund for Commodities

# Plan of presentation

- **<u>Introduction</u>**
- Homogenizing machine description
- Effect of machine on mixed cottons
- Effect of machine on homogenized cotton
- Conclusion

This project is co-funded by the European Union and the Common Fund for Commodities

# Introduction

- Scope of the study
  - Prepare cottons for round tests
  - Several cottons covering a range of characteristics are tested
  - Goal: Compare every lab result to the labs mean result

    ➔ **<u>Avoid raw material variability impact on laboratory results</u>**

This project is co-funded by the European Union and the Common Fund for Commodities

# Introduction

- For any participating cotton
  - proper reading level within a chosen range for the required characteristics (many samples, many repetitions)
  - low variability
    - If good level, and low variability ➔ cotton selected
    - If not, according to given thresholds
      - Cotton rejected
      - **Cotton could be homogenized**

- CFC/ICAC/33 project, Regional round tests in Africa

This project is co-funded by
the European Union and the
Common Fund for Commodities

# Introduction

- The homogenizing machine should ensure
  - a gentle processing (mean unchanged)
  - a decrease in within-cotton variability

  - an easy processing
  - an easy sampling of cotton fibre masses to be sent to every participating lab

This project is co-funded by the European Union and the Common Fund for Commodities

# Plan of presentation

- Introduction
- **Homogenizing machine description**
- Effect of machine on mixed cottons
- Effect of machine on homogenized cotton
- Conclusion

This project is co-funded by the European Union and the Common Fund for Commodities

# The homogenizing machine

Principles:

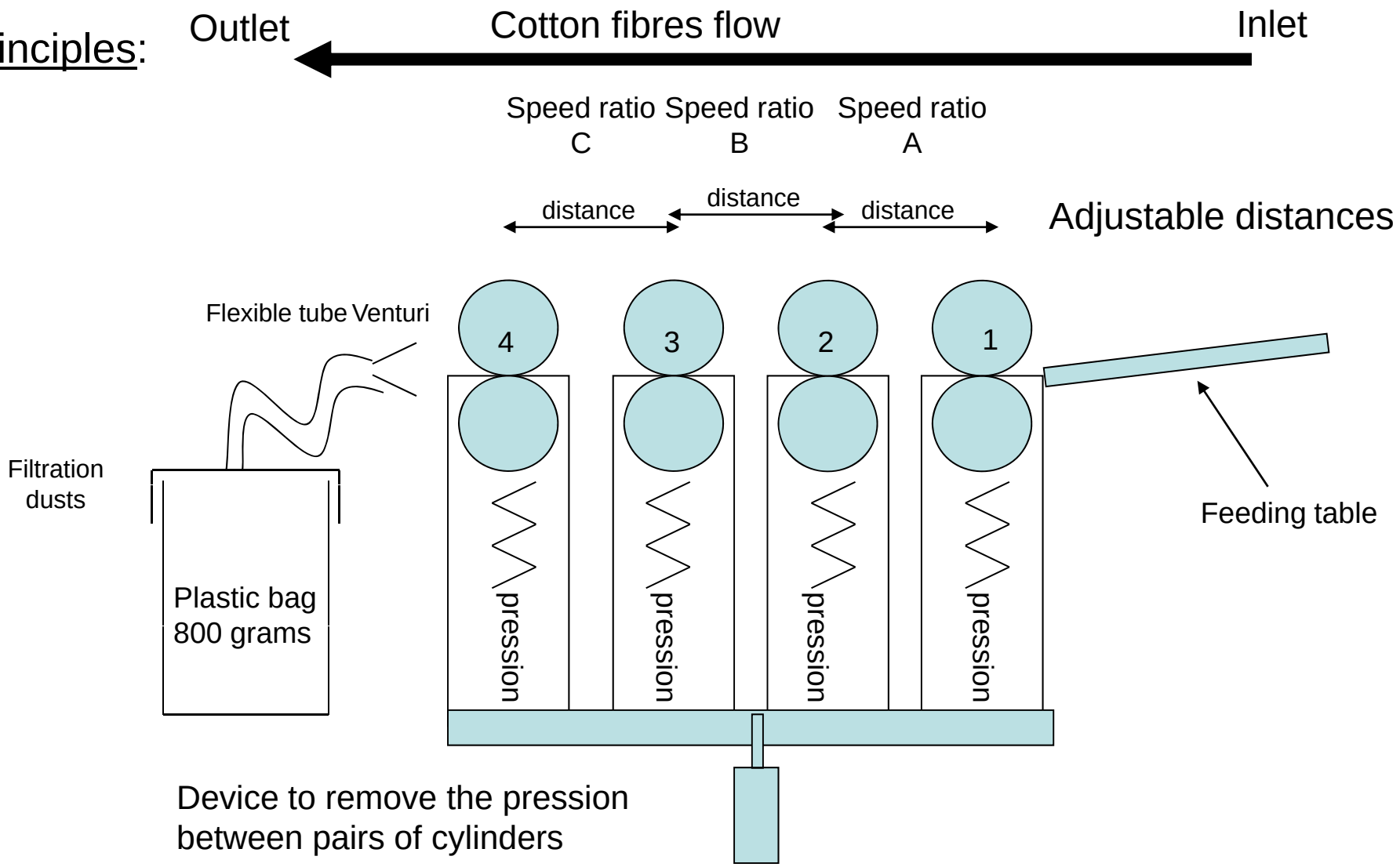

This project is co-funded by the European Union and the Common Fund for Commodities

# The homogenizing machine

Picture:

This project is co-funded by the European Union and the Common Fund for Commodities

# Plan of presentation

- Introduction
- Homogenizing machine description
- **Effect of machine on mixed cottons**
- Effect of machine on homogenized cotton
- Conclusion

This project is co-funded by the European Union and the Common Fund for Commodities

# Mixing cottons with the machine

- Objective
  - Mix 2 types of cottons
  - Observe a difference of variability between “raw” and mixed samples

H0: homogenizing machine reduces the variability of two cottons chosen to be drastically different on their length and strength properties when mixed together

**Exp. 1** small samples (40 g) → 1A: mixing
→ 1B: mixing+“doubling”

**Exp. 2** larger masses (4 kg) → 2A: mixing
→ 2B: mixing+“doubling”

This project is co-funded by the European Union and the Common Fund for Commodities

# Mixing cottons with the machine

- Materials
  - Cottons: LS and SW stacked up on the feeding table
  - Homogenizing machine:
    - » Speed ratios fixed
    - » Distances between pairs of cylinders
    - » Pressure between cylinders
    - » Pressure drop in venturi
  - SITC testing:
    - HVI 1000 M700
    - 2 Mic, 6 LS, 6 CT on 40g or 200g samples

This project is co-funded by the European Union and the Common Fund for Commodities

# Mixing cottons with the machine : Protocol

**Exp. 1A**

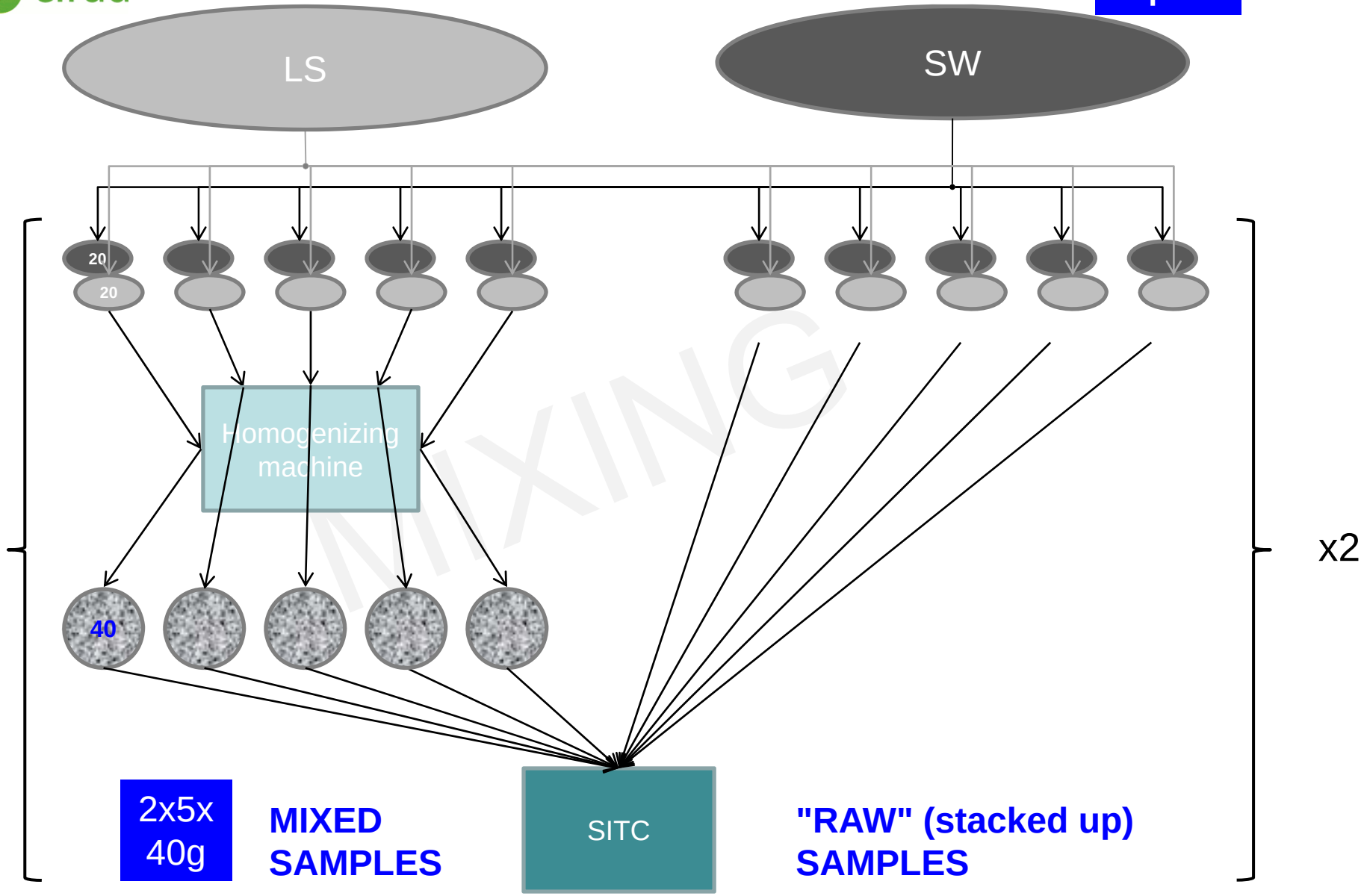

This project is co-funded by the European Union and the Common Fund for Commodities

# Mixing cottons with the machine: Protocol

**Exp. 1B**

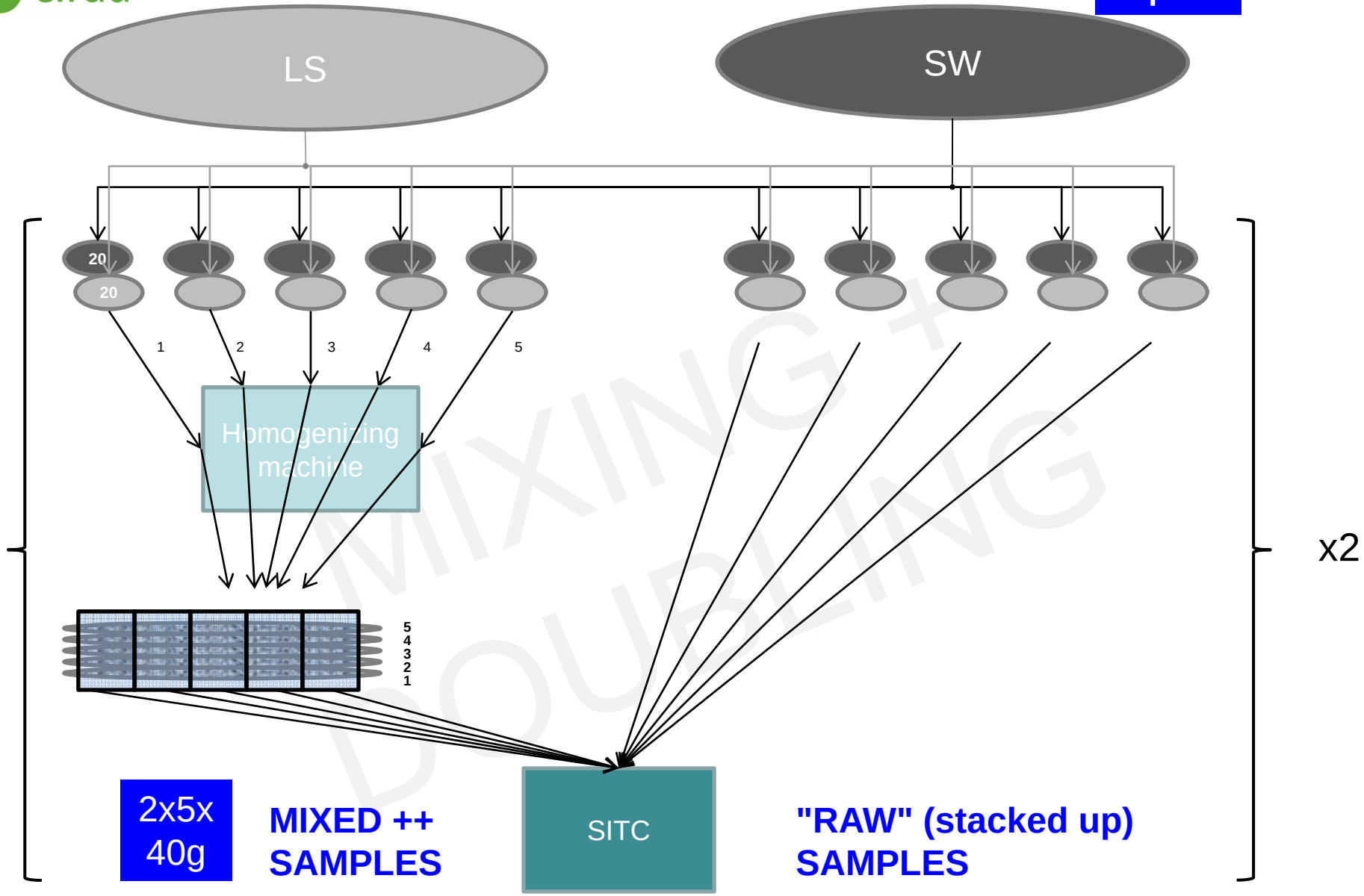

This project is co-funded by the European Union and the Common Fund for Commodities

# Mixing cottons with the machine : Protocol

Exp. 2A

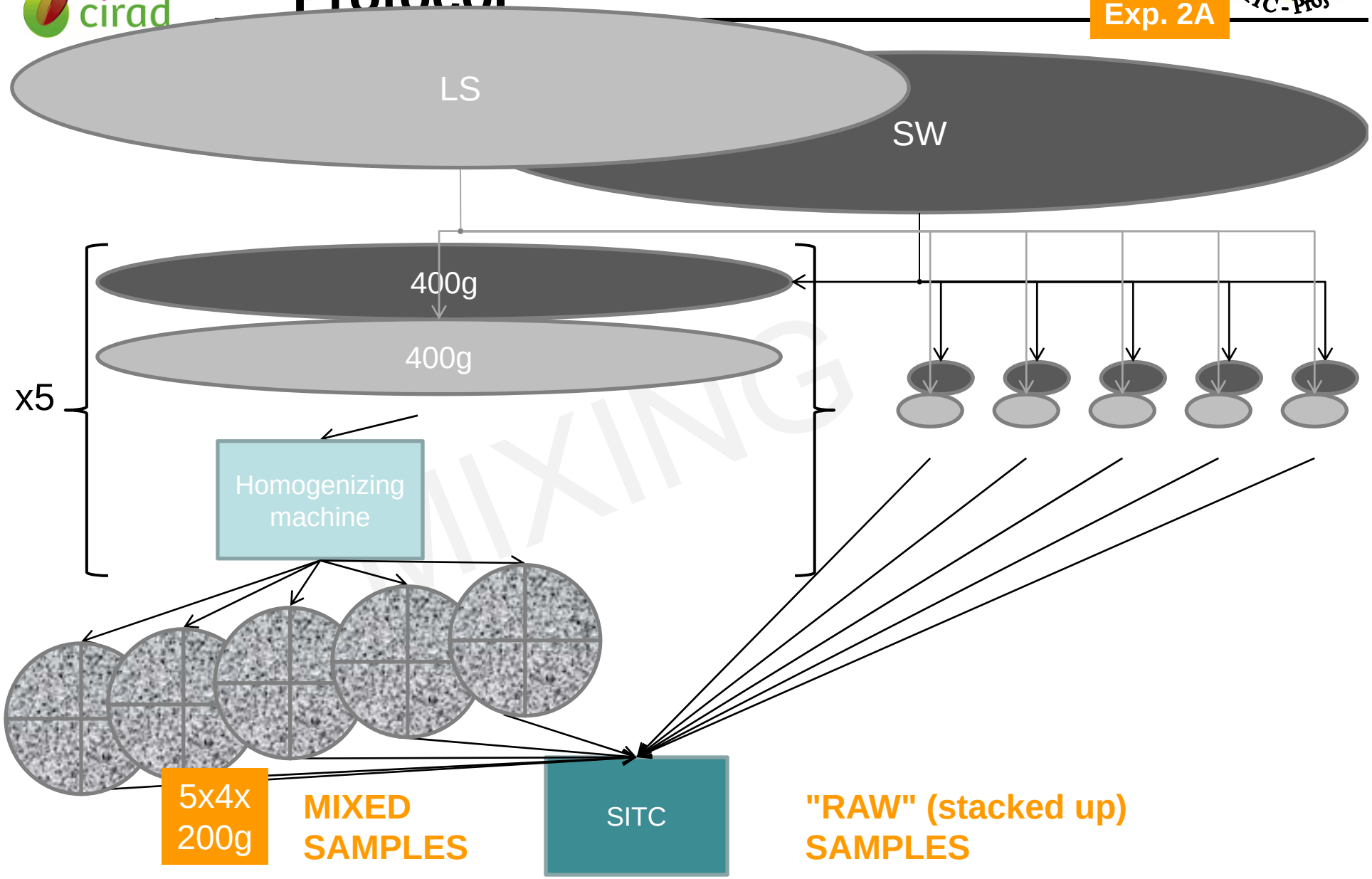

This project is co-funded by the European Union and the Common Fund for Commodities

# Mixing cottons with the machine : Protocol

Exp. 2B

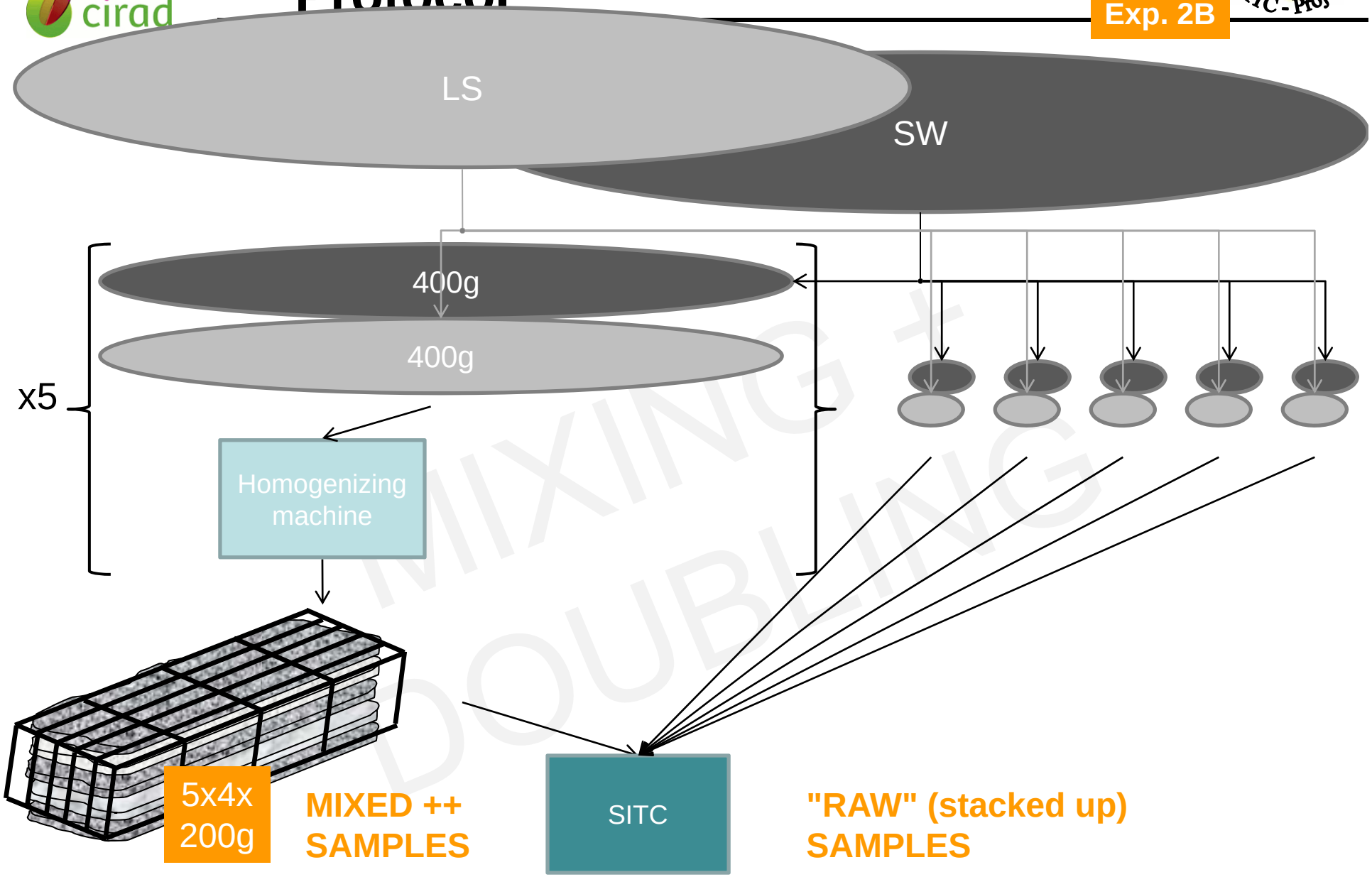

This project is co-funded by the European Union and the Common Fund for Commodities

# Effect of machine on within-cotton variability: results

- Results
  - Example: strength

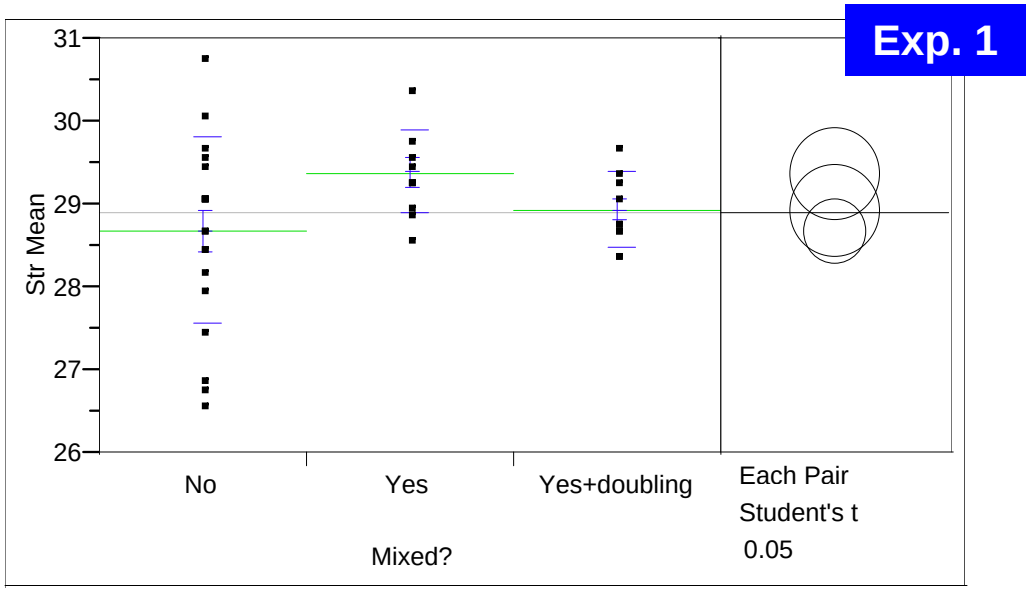


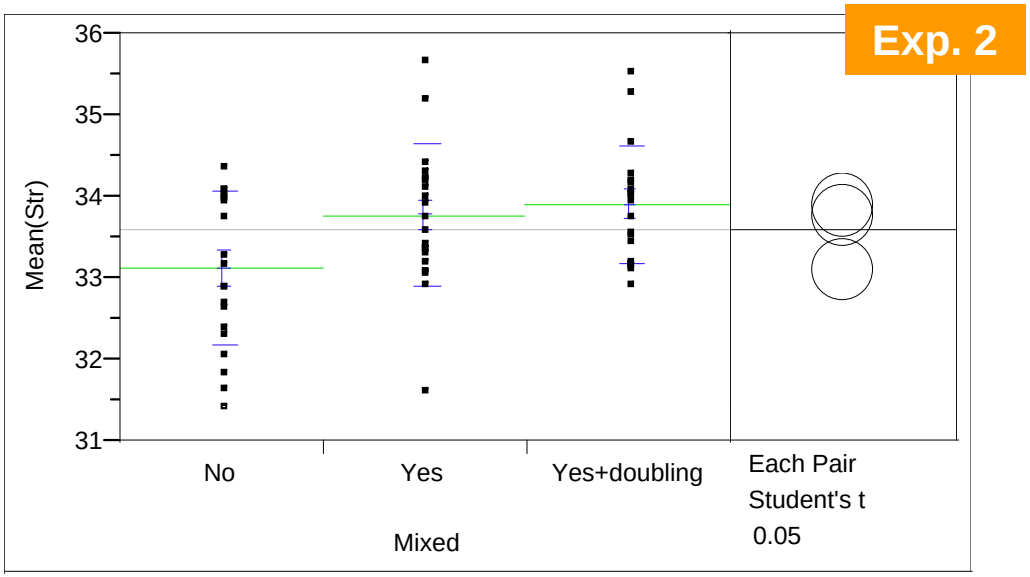

This project is co-funded by the European Union and the Common Fund for Commodities

# Effect of machine on within-cotton variability: results

**Mix small samples (40 g)**

**Exp. 1**

**F-ratio**: raw:mixed

if > 1 → variability tend to decrease

the higher, the more effect of mixing

1A: mixing

| Parameter | Mean | | Variance | | F ratio | Pr>F | Trend to |
|---|---|---|---|---|---|---|---|
| | **Raw** | **M** | **Raw** | **M** | | | |
| Mic | 4.32 | 4.28 | 0.00221 | 0.00042 | 4.9 | 0.01 | decrease significantly |
| UHML mm | 27.97 | 28.31 | 0.20347 | 0.05514 | 3.5 | 0.03 | decrease significantly |
| UI % | 80.94 | 80.63 | 0.37292 | 0.14678 | 2.4 | 0.09 | decrease |
| Str gf/tex | 28.68 | 29.37 | 1.21747 | 0.25344 | 4.6 | 0.01 | decrease significantly |
| Rd | 77.33 | 77.51 | 0.05671 | 0.04767 | 1.1 | 0.45 | decrease |
| +b | 13.25 | 13.34 | 0.01842 | 0.00489 | 3.6 | 0.03 | decrease significantly |
| | **Raw** | **M+D** | **Raw** | **M+D** | | | |
| Mic | 4.32 | 4.27 | 0.00221 | 0.00049 | 4.3 | 0.02 | decrease significantly |
| UHML mm | 27.97 | 28.15 | 0.20347 | 0.01672 | 11.5 | 0.00 | decrease significantly |
| UI % | 80.94 | 80.36 | 0.37292 | 0.03378 | 10.5 | 0.00 | decrease significantly |
| Str gf/tex | 28.68 | 28.93 | 1.21747 | 0.18678 | 6.2 | 0.00 | decrease significantly |
| Rd | 77.33 | 77.67 | 0.05671 | 0.03122 | 1.7 | 0.20 | decrease |
| +b | 13.25 | 13.31 | 0.01842 | 0.00544 | 3.2 | 0.04 | decrease significantly |

1B: mixing and doubling

This project is co-funded by the European Union and the Common Fund for Commodities

# Effect of machine on within-cotton variability: results

**Mix larger samples (4 kg)**

**Exp. 2**

**F-ratio**: raw:mixed *(inverted when in italic)*

if > 1 → variability tend to decrease *(to increase when in italic)*

the higher, the more effect of mixing

2A: mixing

| Parameter | Mean | | Variance | | F ratio | Pr>F | Trend to |
|---|---|---|---|---|---|---|---|
| | **Raw** | **M** | **Raw** | **M** | | | |
| Mic | 4.31 | 4.31 | 0.00234 | 0.00157 | 1.5 | 0.20 | decrease |
| UHML mm | 29.70 | 29.57 | 0.20706 | 0.18532 | 1.1 | 0.41 | decrease |
| UI % | 82.04 | 81.39 | 0.33311 | 0.74054 | *2.2* | *0.04* | *increase* |
| Str gf/tex | 33.11 | 33.78 | 0.86485 | 0.75136 | 1.2 | 0.38 | decrease |
| Rd | 79.39 | 79.68 | 0.04133 | 0.08167 | *2.0* | *0.07* | *increase* |
| +b | 11.54 | 11.52 | 0.05980 | 0.04802 | 1.2 | 0.32 | decrease |
| | **Raw** | **M+D** | **Raw** | **M+D** | | | |
| Mic | 4.31 | 4.30 | 0.00234 | 0.00123 | 1.9 | 0.09 | decrease |
| UHML mm | 29.70 | 29.52 | 0.20706 | 0.08164 | 2.5 | 0.02 | decrease significantly |
| UI % | 82.04 | 81.38 | 0.33311 | 0.17115 | 1.9 | 0.08 | decrease |
| Str gf/tex | 33.11 | 33.90 | 0.86485 | 0.50780 | 1.7 | 0.13 | decrease |
| Rd | 79.39 | 79.68 | 0.04133 | 0.01154 | 3.6 | 0.00 | decrease significantly |
| +b | 11.54 | 11.49 | 0.05980 | 0.01127 | 5.3 | 0.00 | decrease significantly |

2B: mixing and doubling

This project is co-funded by the European Union and the Common Fund for Commodities

# Effect of machine on within-cotton variability: discussion

- The homogenizing machine enables a decrease in variability for the 6 CSITC criteria (UHML and Str) so the mixing effect can be considered as efficient.
- Mixing effect is more important for the procedure involving small samples.
- Additional doubling enables a greater decrease in variability, for both experiments involving small or larger quantities mixed.

This project is co-funded by the European Union and the Common Fund for Commodities

# Plan of presentation

- Introduction
- Homogenizing machine description
- Effect of machine on mixed cottons
- **Effect of machine on homogenized cotton**
- Conclusion

This project is co-funded by the European Union and the Common Fund for Commodities

# Homogenizing cotton with the machine

- Test in partnership with BBB
  - BCRT2008-4 and BCRT2009-4(H): same cotton

- Objective
  - BCRT2009-4: Homogenize large masses of cotton (50 kg) from one bale

    Procedure: machine+doubling described for Exp.2 (12 times)
  - Observe a difference of variability between material before and after homogenization

    H0: homogenizing machine reduces within-cotton variability

This project is co-funded by the European Union and the Common Fund for Commodities

# Homogenizing cotton with the machine

- Materials
  - Cotton: Westafrican Guinea Conakry (RM 40)
  - BCRT2009-4: Homogenizing machine
    - » Speed ratios fixed
    - » Distances between pairs of cylinders
    - » Pressure between cylinders
    - » Pressure drop in venturi
  - Internal experiment in one laboratory:
    - SITC testing: HVI 1000 M1000
    - 10 tests (1 Mic, 2 LS, 2 CT)

This project is co-funded by the European Union and the Common Fund for Commodities

# Effect of machine on within-cotton variability: results and discussion

- Internal procedure to evaluate within-cotton variability

N(raw,2008) = 8
N(H,2009) = 10

**F-ratio**: raw:homogenized
if > 1 → variability decrease

| | Mean | | Variance | | Ratio | Pr>F | Trend to |
|---|---|---|---|---|---|---|---|
| Parameter | Raw | H | Raw | H | Var | | |
| Mic | 3.34 | 3.44 | 0.003 | 0.000 | 7.0 | 0.00 | decrease significantly |
| Str gf/tex | 31.51 | 31.84 | 0.058 | 0.058 | 1.0 | 0.47 | stable |
| UHML mm | 28.93 | 28.57 | 0.062 | 0.011 | 5.9 | 0.01 | decrease significantly |
| UI % | 82.55 | 81.63 | 0.040 | 0.025 | 1.7 | 0.23 | decrease |
| Rd | 71.68 | 72.13 | 0.048 | 0.018 | 2.8 | 0.08 | decrease significantly |
| +b | 12.41 | 12.72 | 0.007 | 0.004 | 1.8 | 0.20 | decrease |

- Variability is reduced after homogenizing procedure → evaluation of the true inter-lab variability (due to laboratory practices, independently from cotton)

This project is co-funded by the European Union and the Common Fund for Commodities

# Interpretation of inter-laboratory variability

- Complementary results (from RT):
  - Over 187 (2008-4) and 141 (2009-4) participating laboratories
  - Inter-lab variance results 2008-4 (Raw) and 2009-4 (H) :

| Parameter | N | | Mean | | Variance | | MD significant? | F Ratio | Trend to |
|---|---|---|---|---|---|---|---|---|---|
| | Raw | H | Raw | H | Raw | H | | | |
| Mic | 74 | 74 | 3.40 | 3.43 | 0.011 | 0.007 | no | 1.6 | decrease significantly |
| Str gf/tex | 65 | 65 | 31.29 | 32.21 | 1.661 | 3.298 | yes | *2.0* | *increase* |
| UHML mm | 63 | 63 | 29.01 | 28.97 | 0.159 | 0.164 | no | 1.0 | stable |
| UI % | 59 | 59 | 82.57 | 82.34 | 0.324 | 0.457 | no | *1.4* | *increase* |
| Rd | 74 | 74 | 70.95 | 71.08 | 3.249 | 3.915 | no | *1.2* | *increase* |
| +b | 70 | 70 | 12.63 | 12.62 | 0.364 | 0.389 | no | *1.1* | stable |

*F-ratios in italic: inverted from raw:H to H:raw in order to get F >1*

→ Open to discussion

This project is co-funded by the European Union and the Common Fund for Commodities

# Plan of presentation

- Introduction
- Homogenizing machine description
- Effect of machine on mixed cottons
- Effect of machine on homogenized cotton
- **Conclusion**

This project is co-funded by the European Union and the Common Fund for Commodities

# Conclusion

## The homogenizing machine ensures:

Very efficient for small quantities → Research samples

– a decrease in within-cotton variability while mean values remain unchanged (gentle process)

Applicable for CSITC RT in Africa

– when associated to an easy doubling process, sampling 4 kg of cotton fibre masses is easy before sending samples to participating labs

This project is co-funded by
the European Union and the
Common Fund for Commodities

# Other possible studies

- Focus on homogenizing:
  - Testing on many types of cotton P1
  - Testing successive ways-in

- Other applications than RT
  - Opening+sampling in one laboratory ?
  - Sticky cotton ?

## Diapositive 28

**P1** or many couples of cottons (mixing)
PAYET; 19/03/2010

This project is co-funded by the European Union and the Common Fund for Commodities

# Note

- Possibility to see the machine at Faserinstitut Bremen
  - + 1 machine at RTC West (CERFITEX, Ségou, Mali)
  - + 1 machine at RTC East (TBS, Dar Es Salaam, Tanzania)
  - + 1 prototype at CIRAD, France

- Acknowledgements:
  - CFC/ICAC/33 project
  - A. Drieling, FIBRE

This project is co-funded by
the European Union and the
Common Fund for Commodities

# Thank you for your attention

This project is co-funded by
the European Union and the
Common Fund for Commodities

# Exp. 3: Protocol

=> 5 layers of 800 g. each

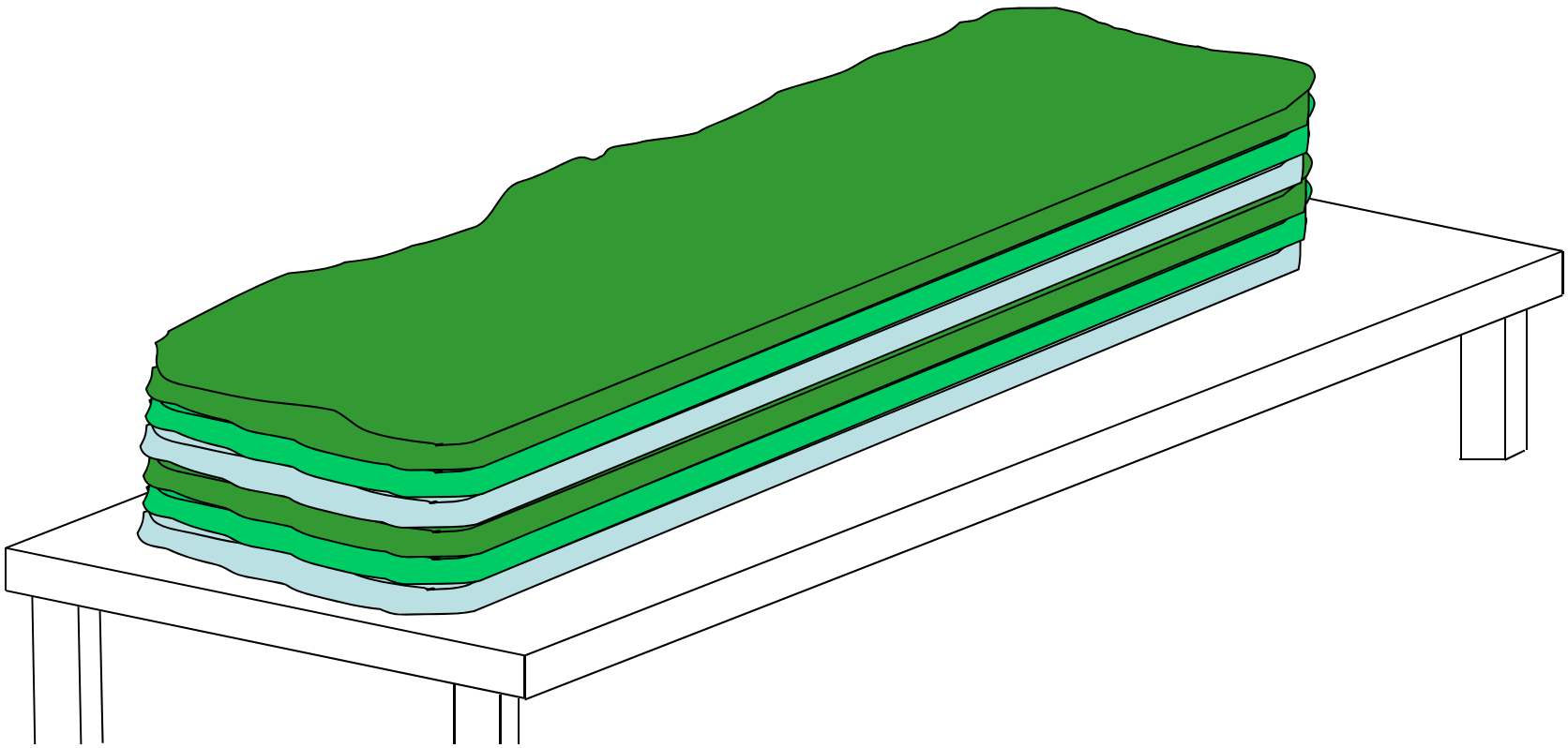

This project is co-funded by the European Union and the Common Fund for Commodities

# Exp. 3: Protocol

This project is co-funded by the European Union and the Common Fund for Commodities

# Exp. 3: Protocol

=> 5 slices

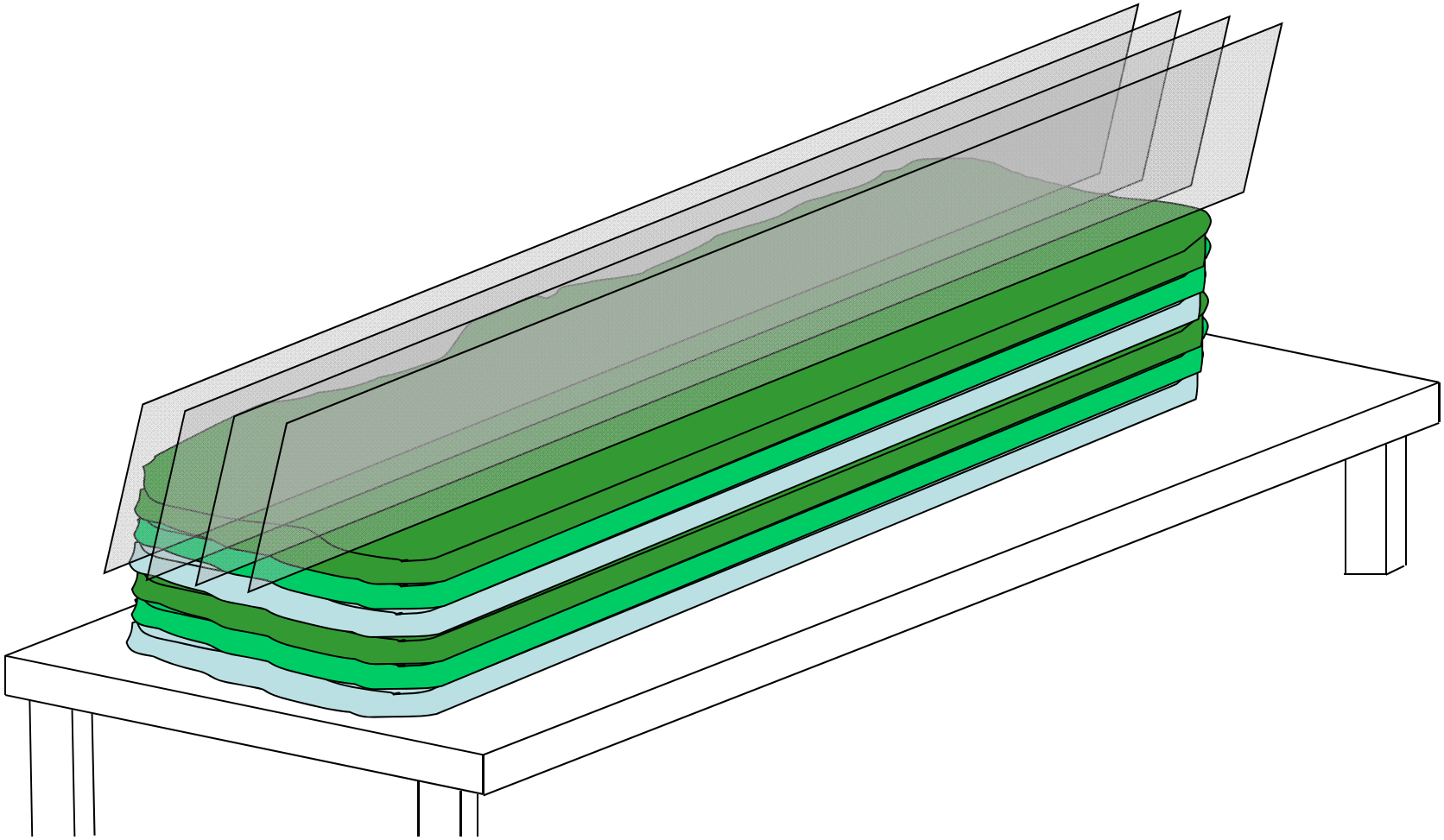

This project is co-funded by
the European Union and the
Common Fund for Commodities

# Exp. 3: Protocol

=> 4 levels

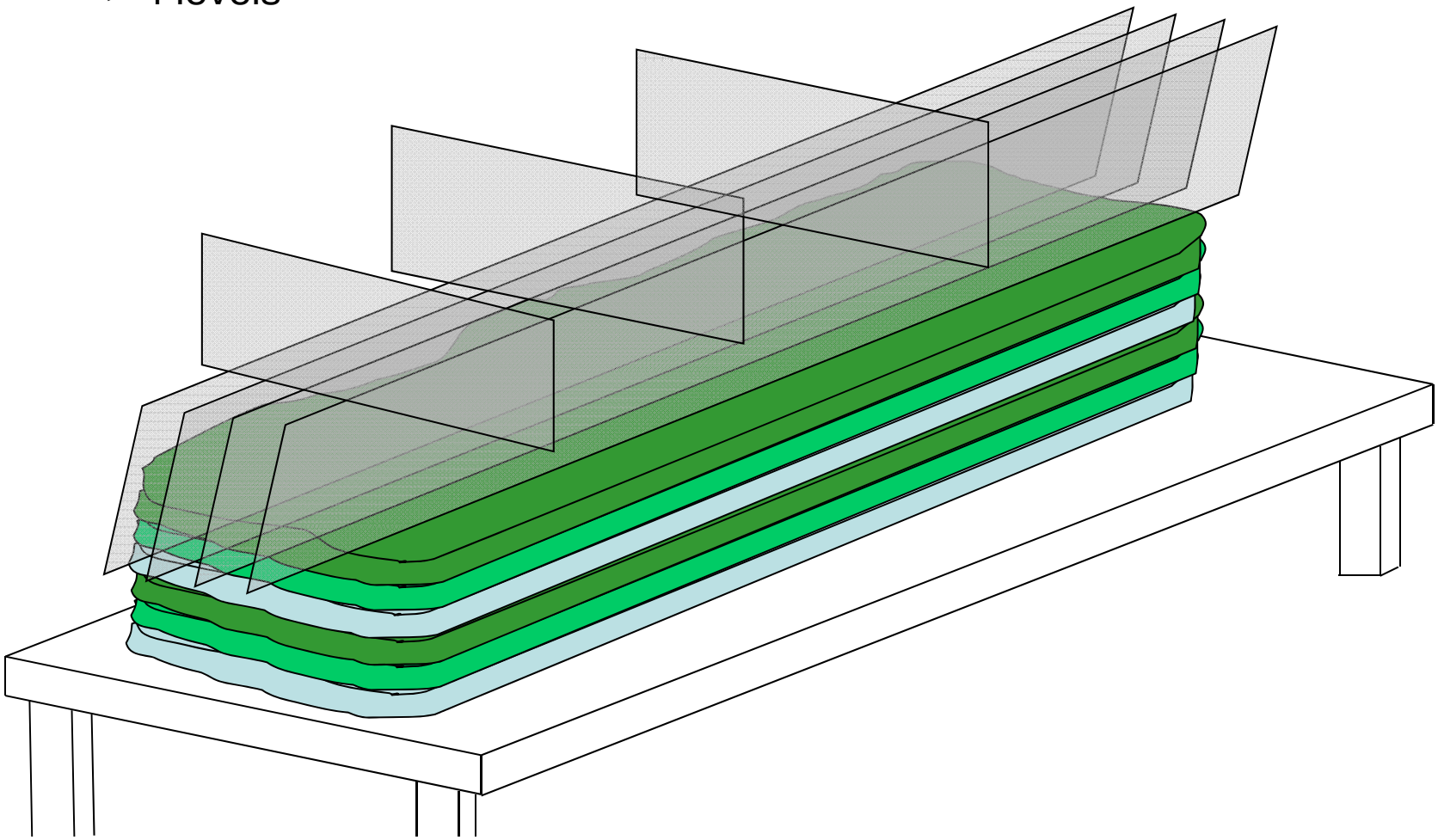

This project is co-funded by
the European Union and the
Common Fund for Commodities

# Exp. 3: Protocol

= 20 samples of 200 grams each

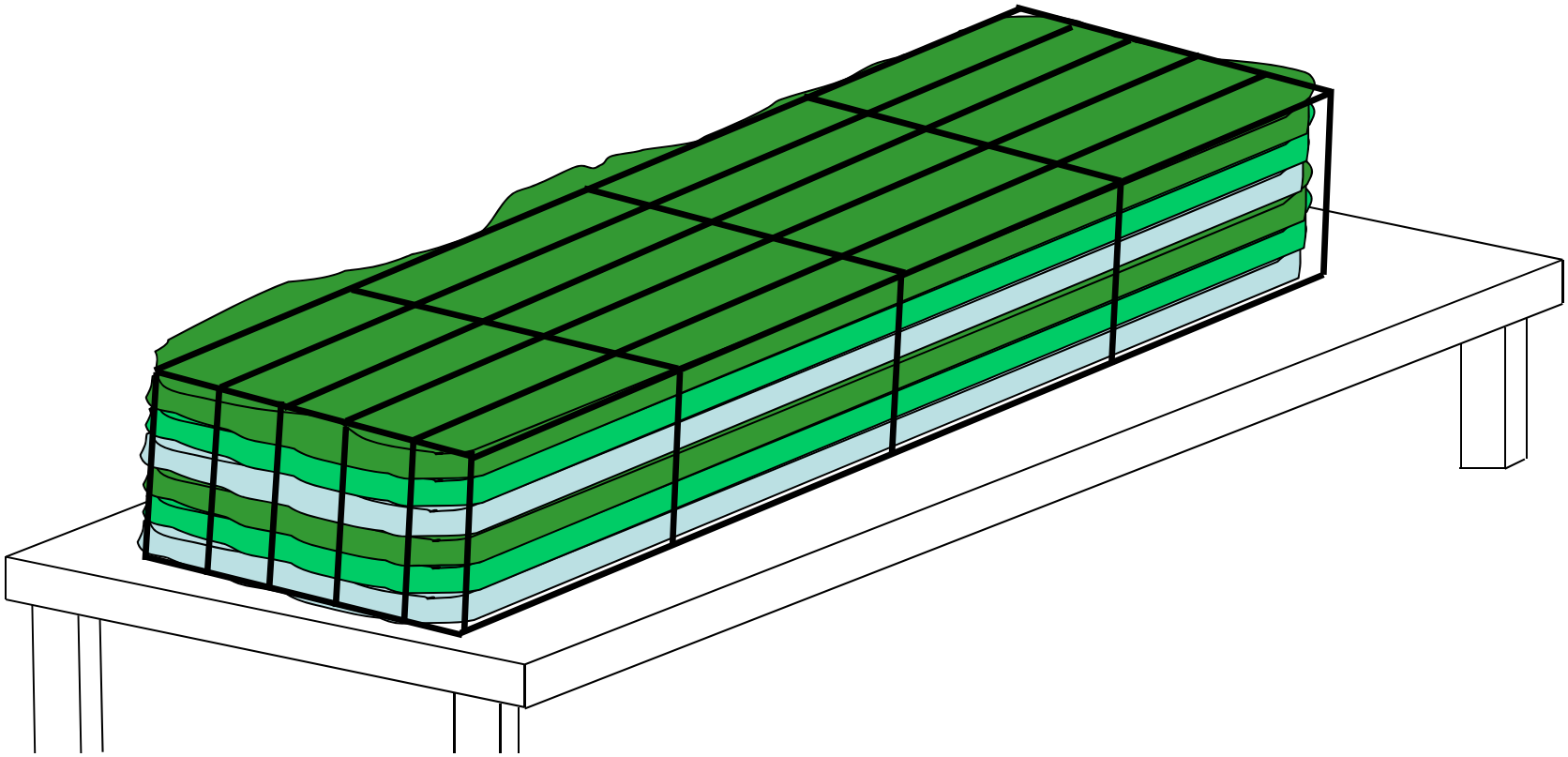

This project is co-funded by the European Union and the Common Fund for Commodities

# Fine study of E2 by AFIS

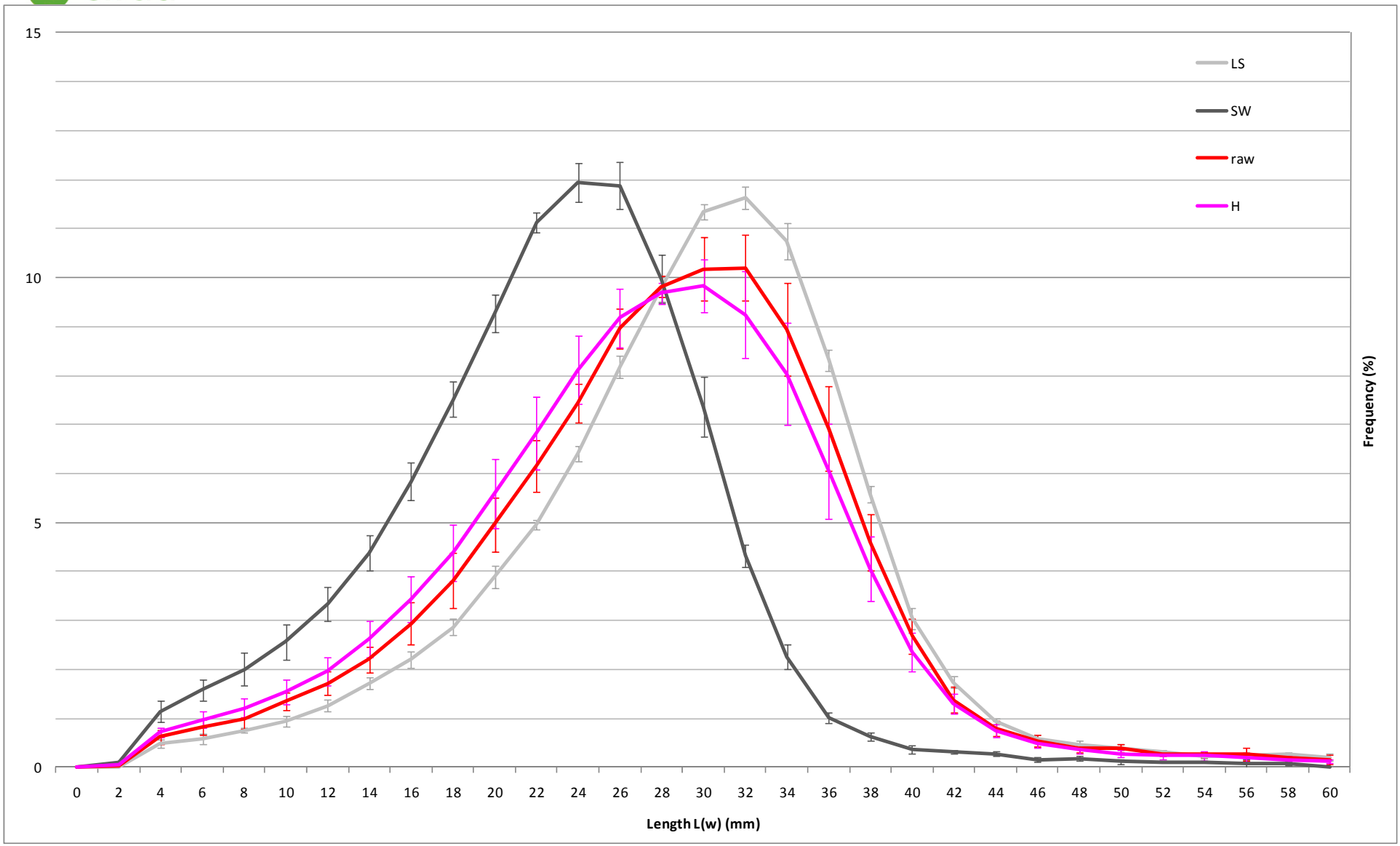

This project is co-funded by the European Union and the Common Fund for Commodities

# Fine study of E2 by AFIS