Fitosanidad
ISSN: 1562-3009
nhernandez@inisav.cu
Instituto de Investigaciones de Sanidad Vegetal
Cuba

Javer-Higginson, Elisa; González-Ramírez, José E.; Teycheney, Pierre-Yves
Caracterización molecular de secuencias endógenas infecciosas de Banana streak virus (eBSVs) en cultivares interespecíficos e híbridos de bananos y plátanos cultivados en Cuba
Fitosanidad, vol. 19, núm. 3, diciembre, 2015, pp. 233-241
Instituto de Investigaciones de Sanidad Vegetal
La Habana, Cuba

Caracterización molecular de secuencias endógenas infecciosas de *Banana streak virus* (eBSVs) en cultivares interespecíficos e híbridos de bananos y plátanos cultivados en Cuba

Molecular characterization of infectious endogenous *Banana streak virus* (eBSV) sequences in banana interspecific cultivars and hybrids grown in Cuba

Elisa Javer-Higginson,[1] José E. González-Ramírez[2] y Pierre-Yves Teycheney[3]

[1] *Instituto de Investigaciones de Sanidad Vegetal, Calle 110 no. 514 e/ 5ta.B y 5ta.F, Playa, C.P. 11600, La Habana, Cuba*
[2] *Instituto de Investigaciones de Viandas Tropicales. Apdo. 6, Santo Domingo, C.P. 53000, Villa Clara, Cuba*
[3] *CIRAD-Bios, UMR AGAP, Station de Neufchâteau, Sainte-Marie, 97130 Capesterre Belle-Eau, Guadeloupe, France*

RESUMEN

Los bananos de tipo postre y los de cocción, así como los plátanos, se originan de dos progenitores: Musa acuminata *(AA) y* Musa balbisiana *(BB). El genoma de este último alberga formas alélicas de secuencias endógenas de Banana streak virus (eBSVs) pertenecientes a las especies* Banana streak OL virus *(eBSOLV),* Banana streak GF virus *(eBSGFV) and* Banana streak IM virus *(eBSImV). La expresión de los alelos infecciosos de las eBSVs en los cultivares interespecíficos de banano con genotipo AAB y AAAB, se dispara por la acción de factores de estrés biótico y abiótico, como el cultivo de tejidos y los cruzamientos interespecíficos y provocan infecciones espontáneas con las especies de BSV relacionadas, con potencialidad para producir brotes infecciosos. Por tanto, las secuencias endógenas de BSV son actualmente el principal obstáculo para el mejoramiento de banano, el intercambio de germoplasma y el cultivo de híbridos interespecíficos, aunque el riesgo de diseminación de BSV a través del cultivo de estos híbridos no ha sido evaluado. La caracterización molecular de los alelos de las eBSVs en híbridos que albergan el genoma* Musa balbisiana *es una herramienta útil para la estimación de este riesgo. En este trabajo se realizó la caracterización de estas secuencias en varios cultivares interepecíficos de bananos y plátanos, y accesiones conservadas en colecciones de germoplasma o que se cultivan en Cuba. Los resultados mostraron que todos los genotipos analizados albergan el alelo infeccioso GF7 excepto Manzano INIVIT (AAB) y que varios de ellos presentan perfiles modificados para la secuencia endógena eBSOLV. Los resultados mostraron igualmente que los híbridos FHIA 01, FHIA 18, FHIA 20, FHIA 21 y el cultivar Manzano INIVIT (AAB) no tienen la secuencia endógena eBSImV.*

Palabras claves: *Banana streak virus (BSV); secuencias endógenas de Banana streak virus (eBSVs); alelo; Musa balbisiana; híbridos interespecíficos.*

ABSTRACT

Dessert and cooking type banana, including plantain, originate from two progenitors: Musa acuminata *(AA) and* Musa balbisiana *(BB). The last one specie genome hosts infectious allelic forms of endogenous* Banana streak virus sequences *(eBSVs) of viral species* Banana streak OL virus *(eBSOLV),* Banana streak GF virus *(eBSGFV) and* Banana streak IM virus *(eBSImV). Expression of infectious eBSV alleles in AAB and AAAB interspecific banana cultivars is triggered by biotic and abiotic stresses including tissue culture and interspecific crosses, leading to spontaneous infections by the related viruses and has the potential to cause BSV outbreaks. Therefore, infectious eBSVs are currently the main constraint for breeding, exchanging and cultivating banana interspecific hybrids, although the risk of spreading BSVs through such hybrids cultivation has not been assessed yet. The molecular characterization of eBSV alleles in interspecific hybrids harboring the* M. balbisiana *genome is instrumental for assessing this risk. In this paper, the molecular characterization in several banana and plantain interspecific cultivars and accessions conserved in germplasm collections and/or cultivated in Cuba is reported. The results showed that all analyzed genotypes harbor infectious allele GF7 except Manzano INIVIT, and that several of them displayed modified eBSOLV allelic patterns. The results also showed that FHIA 01, FHIA 18, FHIA 20, FHIA 21 hybrids and cultivar Manzano INIVIT (AAB) do not present eBSImV sequence.*

Key words: *Banana streak virus (BSV); endogenous Banana streak virus sequences (eBSVs); allele; Musa balbisiana; interspecific hybrids.*

INTRODUCTION

Banana streak viruses (BSVs) infect wild and domesticated bananas (*Musa* sp.) worldwide [Lockhart and Jones, 2000], causing a wide range of symptoms such as leaf streak and pseudostem splitting in in-

Recibido: 11/4/2015
Aceptado: 30/8/2015

fected plants [Lockhart & Olszewski, 1993]. BSVs are mealybug-transmitted badnaviruses (family *Caulimoviridae*). They have bacilliform particles and open-circular double-stranded DNA (dsDNA) genomes of 7.2 to 7.8 kbp which replicate via a reverse-transcription step. Endogenous BSV sequences (eBSVs) are present in the nuclear genome of diploid *Musa balbisiana* (BB), one of the main progenitors of banana and plantain interspecific hybrids [Iskra-Caruana *et al.*, 2010; Chabannes *et al.*, 2013]. Integration is thought to have occurred through horizontal gene transfer [Teycheney and Geering, 2011], since none of the viruses of the family *Caulimoviridae* encode an integrase and integration is not an essential step in the replication cycle of these viruses [Harper *et al.*, 2002; Hohn *et al.*, 2008]. Infectious eBSVs are present in *M. balbisiana* genomes [Chabannes *et al.*, 2013; Duroy, 2012; Duroy *et al.*, unpublished]. They can lead to spontaneous infections by viral species upon activation by biotic and abiotic stresses such as *in vitro* propagation and interspecific crosses [Côte *et al.*, 2010; Dallot *et al.*, 2001], which are thought to release transcriptional silencing repressing their expression [Teycheney & Geering, 2010]. It has been hypothesized that the emergence of banana streak disease observed in newly created banana AAB and AAAB interspecific hybrids within the past 25 years resulted from the activation of infectious eBSVs [Gayral *et al.*, 2008, Iskra-Caruana *et al.*, 2010], causing concern that large scale cultivation of such hybrids could promote BSV outbreaks following activation and mealybug transmission [Meyer *et al.*, 2008]. Thus, eBSVs have become the main constraint for breeding, exchanging and growing banana interspecific hybrids [Lheureux *et al.*, 2003; Barkry *et al.*, 2005].

The fine molecular structure of eBSVs was recently elucidated in the model seedy diploid *Musa balbisiana* (BB) cultivar Pisang Klutuk Wulung (PKW) by combining molecular, genomic, genetic, and cytogenetic approaches [Gayral *et al.*, 2008, 2010, Chabannes *et al.*, 2013]. These authors showed that endogenous sequences of BSV species Obino l'Ewaï (BSOLV), Goldfinger (BSGFV) and Imové (BSIMV) are present in the genome of PKW. Integration of eBSOLV and eBSGFV occurs under allelic forms at a single locus within chromosome 1 and only one allele is infectious, whereas integration of eBSImV occurs at a single locus of chromosome 2 but not under allelic forms (*Figure 1*).

Specific primers were developed [Gayral *et al.*, 2008, 2010; Chabannes *et al.*, 2013], based on the sequence of the eBSVs of PKW, in order to assess the eBSVs patterns of genetic resources harbouring *M. balbisiana* genome. Using these primers, the molecular structure of eBSVs was established in several seedy diploid *M. balbisiana* and interspecific ABB, AAB and AB hybrids and cultivars [Duroy, 2012; Chabannes *et al.*, 2013].

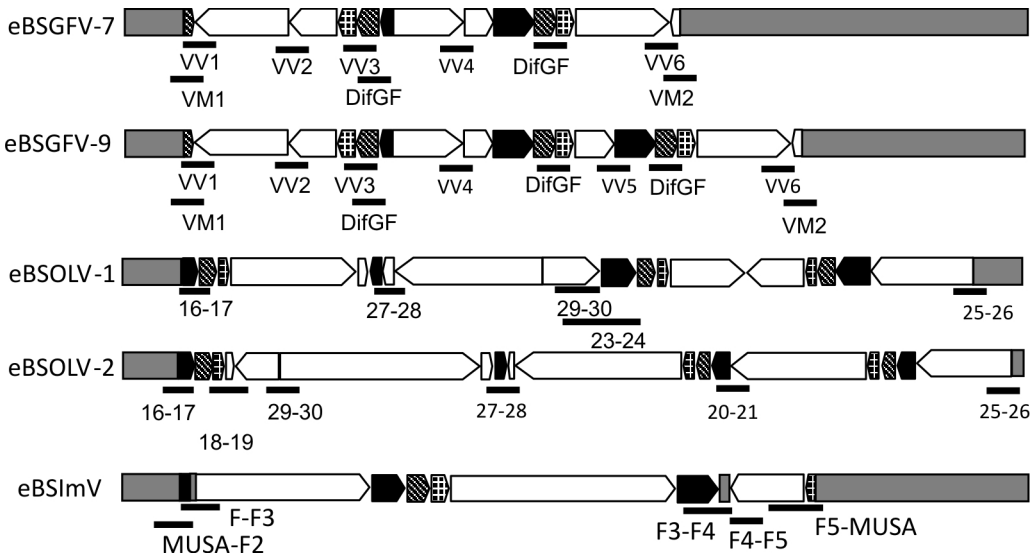

Figure 1. Schematic representation of the molecular structure of eBSGFV and eBSOLV alleles and eBSImV sequence in the genome of PKW.

Legend to figures

Figure 1. Schematic representation of the molecular structure of eBSGFV and eBSOLV alleles and eBSImV sequence in the genome of PKW. The position of PCR primers used for genotyping eBSVs is shown underneath the representation of each eBSV; all were developed by Gayral *et al*., 2010 and Chabannes *et al*., 2013. *Musa* genome sequences are shown is in dark gray. Diagonal, checked, white and black pattern boxes show sequences of BSV ORFs I, II, III and intergenic region, respectively. Arrowed boxes indicate the orientation of the viral fragments within each eBSV.

Adapted from Duroy, 2012.

The position of PCR primers used for genotyping eBSVs is shown underneath the representation of each eBSV; all were developed by Gayral *et al*. (2010) and Chabannes *et al*. (2013). *Musa* genome sequences are shown is in dark gray. Diagonal, checked, white and black pattern boxes show sequences of BSV ORFs I, II, III and intergenic region, respectively. Arrowed boxes indicate the orientation of the viral fragments within each eBSV. Adapted from Duroy, 2012.

Banana is the third most important fruit crop in Cuba, with plantain representing 20 % of the production of all tubers and roots [Pérez-Vicente, 2011]. Interspecific hybrid cultivars of AAAB, AAB and ABB genotypes are widely cultivated; therefore, it is essential to assess the risk of spreading BSVs through the cultivation of such hybrids. To this aim, a first step for was taken through the molecular characterization of eBSGFVs, eBSOLVs and eBSImVs in a selection of banana and plantain interspecific hybrids cultivars and accessions representing the diversity of *Musa spp* grown in the country.

MATERIALS AND METHODS

Plant material

Fresh leaf samples were kindly supplied by the Instituto de Investigaciones de Viandas Tropicales (INIVIT, Villa Clara, Cuba) and Capa Rosa farm (Quivicán, Mayabeque, Cuba). A detailed list of the samples is provided in *Table 1*.

Table 1. *Musa* accessions and hybrids cultivars used for the characterization of eBSVs

Accesion/variety	*Subgroup*	*Genome*	*Origin*
Burro CEMSA	Bluggoe	ABB	Musa collection, INIVIT, Villa Clara
Burro amarillo	Bluggoe	ABB	Musa collection, INIVIT, Villa Clara
Burro enano	Bluggoe	ABB	Musa collection, INIVIT, Villa Clara
Pelipita	Pelipita	ABB	Musa collection, Quivicán, Mayabeque
Burro CEMSA semi enano	Bluggoe	ABB	Musa collection, INIVIT, Villa Clara
Burro CEMSA enano	Bluggoe	ABB	Musa collection, INIVIT, Villa Clara
Burro Nica	Bluggoe	ABB	Musa collection, INIVIT, Villa Clara
Saba	Bluggoe	ABB	Musa collection, INIVIT, Villa Clara
Burro 3/4	Bluggoe	ABB	Musa collection, INIVIT, Villa Clara
Burro criollo	Bluggoe	ABB	Musa collection, INIVIT, Villa Clara
Burro CEMSA rayado	Bluggoe	ABB	Musa collection, INIVIT, Villa Clara
Burro CEMSA cenizo	Bluggoe	ABB	Musa collection, INIVIT, Villa Clara
Duvao	Bluggoe	ABB	Musa collection, INIVIT, Villa Clara
Chato	Bluggoe	ABB	Musa collection, INIVIT, Villa Clara
Macho 3/4	Plantains	AAB	Musa collection, INIVIT, Villa Clara
CEMSA 3/4	Plantains	AAB	Musa collection, INIVIT, Villa Clara
FHIA 21	FHIA	AAAB	Musa collection, INIVIT, Villa Clara
FHIA 20	FHIA	AAAB	Musa collection, INIVIT, Villa Clara
FHIA 18	FHIA	AAAB	Musa collection, INIVIT, Villa Clara
FHIA 01	FHIA	AAAB	Musa collection, INIVIT, Villa Clara
FHIA 03	FHIA	AABB	Musa collection, Quivicán, Mayabeque
FHIA25	FHIA	AAAB	Musa collection, Quivicán, Mayabeque
Manzano INIVIT	Silk	AAB	Musa collection, Quivicán, Mayabeque
Manzano Vietnamita	Pisang awak	ABB	Musa collection, INIVIT, Villa Clara
Pisang klutuk wulung (PKW)	Balbisiana	BB	Neufchâteau, CIRAD Guadalupe
Grande Naine	Cavendish	AAA	Neufchâteau, CIRAD Guadalupe

Total genomic DNA was extracted from fresh leaf tissue by the method of Gawel and Jarret (1991). Genomic DNA from control cultivars Pisang Klutuk Wulung (BB) and Grande Naine (AAA) was supplied by CIRAD (Station de Neufchâteau, Guadeloupe, France). The quality of DNA was assessed by electrophoresis in a 0.8 % agarose gel in TBE 0,5X (45 mM Tris-borate, 1 mM EDTA pH 8) and visualized under UV light after ethidium bromide staining, and also by PCR with primer pair Actin1F (5´-TCCTTTCGCTCTATGCCAGT-3´) / Actin1R (5´-GCCCATCGGGAAGTTCATAG-3´) targeting *Musa* genes encoding actin. PCR reaction mix of 25 µl contained 20 mM Tris–HCl (pH 8.4), 50 mM KCl, and 100 mM each dNTP, 1.5 mM $MgCl_2$, 10 pmol of each primer and 2U *Taq* DNA polymerase (Eurogentech, Seraing, Belgium). PCR cycle conditions were an initial denaturation step at 94 °C for 5 min, then 25 cycles at 94 °C for 30 s, 58 °C for 30 s, 72 °C for 30s followed by a final elongation step of 5 min at 72 °C. PCR products were analyzed by electrophoresis as described above.

Molecular characterization of eBSGFV, eBSImV and eBSOLV sequences

The sequence patterns of eBSGFV, eBSImV and eBSOLV were assessed by PCR-based screening according to Gayral *et al.* (2010) and Chabannes *et al.* (2013). The list and sequence of primers used are provided in *Table 2* and their location on eBSVs is shown on *Figure 1*.

Table 2. Primers used for eBSV genotyping

Target of primer	*Name of primer*	*Primer sequence (5'-3')*	*Expected size of PCR product (bp)*
eBSGFV junctions with *Musa* genome	VM1F	TTGTCCAAAATCTGCTCGTG	374
	VM1R	TGTAATTCCTGCTCCTGCAA	
	VM2F	TTCTCCCTTTTCGATCCGTA	268
	VM2R	TTTTGATGCATCTCCAGCAG	
	VM2bis-F	GAGGCCCTTATGCATTGTTG	159
	VM2bis-R	TCGACCGTACCGATATCCTC	
eBSGFV structure	VV1F	ACAGCTCCAGGAGATTGGAA	268
	VV1R	CTGAAGTGTGCCTGTGGAGA	
	VV2F	TCTGAGATCTCCAGCCAGGT	639
	VV2R	GACAGTTCCAGCACAGCAGA	
	VV2bis-F	GCTGGCAGTGGAATTCAGTT	395
	VV2bis-R	CATGGTGGGAGAAGAGGAAG	
	VV3F	TTGCCAAGAATTCCTCCAAG	376
	VV3R	AAGTTCTTGTCGGCAAGGTG	
	VV4F	GAGCAACACGAGTCAACGAA	784
	VV4R	TCTCCACAGGCACACTTCAG	
	VV4bis-F	GGAAAACTCTGGGTTGGTGA	766
	VV4bisR	GGAGATCGGCATTTTTCTCCA	
	VV6F	GCATGAAGCATGACTGGAGA	264
	VV6R	AATGCATAAGGGCCTCGAAT	
	VV6bis-F	AGGCCACTACGCATCAGAAT	712
	VV6bis-R	GGCCTCGAATTTATCATTGG	
eBSGFV-9 (Non infectious allele)	VV5F	CCATGGAGGTTGACCTGTCT	628
	VV5R	ACCCCTCTGTCTTCCCAACT	
	VV5bis-F	CGCACCTTCATCACAGAAGA	588
	VV5bis-R	TACCAGATGGGGAGAAATCG	

eBSGFV allelic differentiation	Dif GFF	TTGCAGGAGCAGGAATTACA	670
	Dif GFR	GGATGGAAGATGAGCTCTTTG	
eBSOLV junctions with *Musa* genome	Musa-Ol Unión1 F (16)	TGCATTAGATGGTCTGGGAAA	563 bp
	Musa-Ol Unión1 R (17)	ACTTCACGATGCCCATGTTT	
	Musa-Ol Unión2 F (25)	GAGCTGTTTCCTCCGTGTCT	590 pb
	Musa-Ol Unión2 R (26)	CCTGGAAGAAAGCAGACGAG	
eBSOLV structure	sig1 eBSOLV F (27)	TTCGAGGAGTCAACGGAGTC	606 bp
	sig1 eBSOLV R (28)	CCTGGTCTGCACAGAGATGA	
	sig2 eBSOLV F (29)	CTTGCTCTGTGGGCAAGACT	426 bp
	sig2 eBSOLV R (30)	CCATTTTTCTCGCAGATTGTC	
eBSOLV -2 (Non infectious allele)	Marker1-BSOLV(2) F (18)	ATACGAAGCCCAACGAATTG	601 bp
	Marcker1-BSOLV(2) R (19)	ATGGCTTGCCTTCACAGATT	
	Marker 2-BSOLV(2) F (20)	ACTCGCACAAAGTGAACTCG	399 bp
	Marcker2-BSOLV(2) R (21)	ACAGTACAAGCCCCACCAAT	
eBSOLV -1 (infectious allele)	Marker2-BSOLV(1) F (23)	GTGGTGGTTCTTGATCCGGT	1469 bp
	Marker 2-BSOLV(1) R (24)	CACGTGGTAGGGGTCCGCCA	
eBSImV junctions with Musa genome	Musa/F2-F	ACTCAGCAAAGGCAAGCAGT	561
	Musa/F2-R	TCTGGTGTGAGTTTTAATAATACCG	
	Musa/F2 bis-F	AGCTGAAGTGATGCGAACCT	937
	Musa/F2-R	TCTGGTGTGAGTTTTAATAATACCG	
	F5/Musa-F	GTATGGTTCTTGCCCGATGA	594
	F5/Musa-R	TCGTGCAGACCCCTTACTCT	
	F5/Musa bis-F	CCACCTGGTATCCCTGAAGA	905
	F5/Musa bis -R	TGTCAAGCTGTTGGTTGCTC	
eBSImV structure	F1/F3-F	TTCGGTATTATTAAAACTCACACCA	490
	F1/F3-R	GCTGCTAACTGAGGATAATCGAA	
	F1/F3-F	TTCGGTATTATTAAAACTCACACCA	630
	F1/F3 bis-R	TTCTTGGGGTACTGGTTTCG	
	F3/F4-F	TCCCACGCAAGCTTACTTCT	600
	F3/F4-R	GAAGCTGTCCAAGCCTATATCA	
	F3/F4 bis-F	GGTGCAAATCAGAGTCATGC	987
	F3/F4-R	GAAGCTGTCCAAGCCTATATCA	
	F4/F5-F	TGGACAGCTTCTGGTGTGAG	540
	F4/F5-R	AGCAGCTACAACCCTGGAGA	
	F4/F5-F	TGGACAGCTTCTGGTGTGAG	927

All PCR reactions were performed in 25 µl reaction volumes, using five to ten nanograms of genomic DNA. Reactions mixes contained 20 mM Tris-HCl pH 8.4, 50 mM KCl, 100 mM of each dNTP, 10 pmol of each forward and reverse primers and 2U of Taq polymerase (New England Biolabs, Evry, France). PCR conditions were: one cycle at 94 °C for 5 min, followed by 30 to 35 cycles at 94 °C for 30 s, 60 to 65 °C for 30 s, 72 °C for 15 s to 1 min 30 s and a final extension step of 72 °C for 10 min. PCR products were analyzed by electrophoresis as described above.

Differentiation of eBSGFV allelic forms was achieved by the DifGFF-TaaI method of Gayral *et al.* (2008), with slight modifications. Five to ten nanograms of genomic DNA was subjected to PCR using primer pair DifGFF/DifGFR. PCR conditions were one cycle at 94 °C for 5 min, followed by 35 cycles at 94 °C for 30 s, 55 °C for 30 s and 72 °C for 35 s, and a final extension step of 72 °C for 10 min. Seven microlitres of PCR products were digested for 2 hours at 37 °C with 5U of HpyCH4III (New England Biolabs, Evry, France), an isoschizomer of restriction enzyme TaaI, according to the manufacturer's instructions. Digestion products were analyzed by electrophoresis as described above.

RESULTS AND DISCUSSION

All the hybrids cultivars harboring two copies of the *M. balbisiana* genome (ABB, AABB) analyzed in this work, displayed both infectious (GF7) and non-infectious (GF9) eBSGFV alleles, bearing similar eBSGFV patterns to that of model species PKW (*Table 3*). Triploid AAB varieties Macho ¾ and CEMSA ¾ and tetraploid (AAAB) hybrids FHIA 20 and FHIA 21 displayed only infectious allele GF7, whereas cultivar Manzano INIVIT (AAB) was devoid of eBSGFV. Surprisingly, tetraploid AAAB hybrids FHIA 18 and FHIA 01 and triploid AAB hybrid FHIA 25 displayed GF7/GF9 patterns (*Table 3*). This finding was unexpected considering that they supposedly carry only one copy of the *M. balbisiana* genome and therefore either eBSGFV allele, but not both. A possible explanation for the presence of both alleles in these hybrids is that they could be diploid for *M. balbisiana* chromosome 1, which carries eBSGFVs [Chabannes *et al.*, 2013]. Similar assumptions were made previously by Duroy (2012), for diploid (AB) cultivars Ney Poovan and Safet Velchi to explain similar GF7/GF9 patterns.

All analyzed ABB hybrids, tetraploid AABB hybrid FHIA 03, triploid AAB hybrid FHIA 25 and cultivar Manzano Vietnamita displayed an eBSImV pattern identical to that of PKW, indicating that they carry the infectious eBSImV sequence. On the opposite, triploid AAB plantain cultivars Macho ¾ and CEMSA ¾, tetraploid AAAB hybrids FHIA 21, FHIA 20, FHIA 18, FHIA 01 and triploid AAB cultivar Manzano INIVIT, lacked eBSImV. These results correlate with those by Duroy, 2012 showing that the majority of ABB accessions carry the infectious eBSImV sequence whereas AAB plantains do not. These authors also reported that triploid AAB dessert banana cultivar Prata Ana, is also devoid of eBSImV, providing an explanation to why FHIA 01 and FHIA 18 tetraploid AAAB hybrids, resulting from a cross between Prata Ana and a *M. acuminata* parent, lack eBSImV.

The majority of analyzed hybrids and cultivars harboring two copies of the *M. balbisiana* genome were homozygous for non-infectious allele OL2 (*Table 3*). Cultivar Pelipita (ABB) was the only one displaying an eBSOLV pattern similar to that of PKW. Triploid AAB varieties Macho ¾ and CEMSA ¾ and tetraploid (AAAB) hybrids FHIA 20 and FHIA 21 displayed only infectious allele OL1. A substantial number of the analyzed hybrids and cultivars displayed modified OL2 alleles ($OL2^*$) under a homozygous ($OL2^*/OL2^*$) form. Tetraploid AAAB hybrids FHIA 18 and FHIA 01 also displayed modified OL2 alleles, under an apparently heterozygous ($OL1/OL2^*$) form although they supposedly carry only one copy of the *M. balbisiana* genome and should therefore carry only one eBSOLV allele. As mentioned above, this situation may result from the fact that FHIA 18 and FHIA 01 could be diploid for *M. balbisiana* chromosome 1, which also carries eBSOLV alleles [Chabannes *et al.*, 2013]. Overall, these results confirm the important diversity of eBSOLV patterns among accessions and hybrids harboring the *M. balbisiana* genome, as previously highlighted by Duroy, 2012 who reported at least 22 allelic forms of this sequence.

The work reported in this paper builds on previous studies carried out by Gayral *et al.* (2010) and Duroy, 2012 who explored the molecular diversity of eBSVs in the B genome of seedy diploids (BB) and interspecific hybrids with various levels of ploidy for the B genome. These authors showed that the majority of the plants they analyzed shared integration patterns similar to that of PKW, particularly BB and ABB accessions.

Table 3. eBSGFV, eBSOLV and eBSImV genotyping in several banana and plantains hybrids cultivars and accessions in Cuba

Hybrid/variety	*Species, subgroup/ genotype*	*eBSGFV markers*									*eBSGFV pattern*	*Risk of activa-tion*	*eBSOLV markers*							*eBSOLV pattern*	*Risk of activa-tion*	*eBSImV markers*					*eBSImV pattern*	*Risk of activa-tion*
		Vm1	*Vm2*	*VA1*	*VA2*	*VA3*	*VA4*	*VA5*	*VA6*	*Dif Gf*			*16/17*	*18/19*	*20/21*	*23/24*	*25/26*	*27/28*	*29/30*			*Musa67*	*F1/F3*	*F3/F4*	*F4/F5*	*F5/usa*		
Burro CEMSA	Bluggoe/ABB	+	+	+	+	+	+	+	+	+	GF7/F9	-	+	+	+	-	+	+	+	OL2/OL2	-	+	+	+	+	+	Im/Im	-
Burro amarillo	Bluggoe/ABB	+	+	+	+	+	+	+	+	+	GF7/GF9	-	+	-	+	-	+	+	-	OL2*/OL2*	-	+	+	+	+	+	Im/Im	-
Burro enano	Bluggoe/ABB	+	+	+	+	+	+	+	+	+	GF7/GF9	-	+	-	+	-	+	+	-	OL2*/OL2*	-	+	+	+	+	+	Im/Im	-
Burro CEMSA semienano	Bluggoe/ABB	+	+	+	+	+	+	+	+	+	GF7/GF9	-	+	+	+	-	+	+	+	OL2/OL2	-	+	+	+	+	+	Im/Im	-
Burro CEMSA enano	Bluggoe/ABB	+	+	+	+	+	+	+	+	+	GF7/GF9	-	+	+	+	-	+	+	+	OL2/OL2	-	+	+	+	+	+	Im/Im	-
Burro Nica	Bluggoe/ABB	+	+	+	+	+	+	+	+	+	GF7/GF9	-	+	+	+	-	+	+	+	OL2/OL2	-	+	+	+	+	+	Im/Im	-
Burro 3/4	Bluggoe/ABB	+	+	+	+	+	+	+	+	+	GF7/GF9	-	+	-	+	-	+	+	-	OL2*/OL2*	-	+	+	+	+	+	Im/Im	-
Burro criollo	Bluggoe/ABB	+	+	+	+	+	+	+	+	+	GF7/GF9	-	+	-	+	-	+	+	-	OL2*/OL2*	-	+	+	+	+	+	Im/Im	-
Burro CEMSA rayado	Bluggoe/ABB	+	+	+	+	+	+	+	+	+	GF7/GF9	-	+	-	-	-	+	+	-	OL*	-	+	+	+	+	+	Im/Im	-
Burro CEMSA cenizo	Bluggoe/ABB	+	+	+	+	+	+	+	+	+	GF7/GF9	-	+	+	+	-	+	+	+	OL2/OL2	-	+	+	+	+	+	Im/Im	-
Duvao	Bluggoe/ABB	+	+	+	+	+	+	+	+	+	GF7/GF9	-	+	+	+	-	+	+	+	OL2/OL2	-	+	+	+	+	+	Im/Im	-
Chato	Bluggoe/ABB	+	+	+	+	+	+	+	+	+	GF7/GF9	-	+	+	+	-	+	+	+	OL2/OL2	-	+	+	+	+	+	Im/Im	-
Pelipita	Pelipita/ABB	+	+	+	+	+	+	+	+	+	GF7/GF9	-	+	+	+	+	+	+	+	OL1/OL2	-	+	+	+	+	+	Im/Im	-
Saba	Saba/ABB	+	+	+	+	+	+	+	+	+	GF7/GF9	-	+	+	+	-	+	+	+	OL2/OL2	-	+	+	+	+	+	Im/Im	-
Manzano Vietnamita	Pisang awak/ABB	+	+	+	+	+	+	+	+	+	GF7/GF9	-	+	-	+	+	+	+	+	OL1/OL2*	-	+	+	+	+	+	Im/Im	-
Macho 3/4	Plantains/AAB	+	+	+	+	+	+	-	+	+	GF7	+	+	-	-	+	+	+	+	OL1	+	-	-	-	-	-	-	-
CEMSA 3/4	Plantains/AAB	+	+	+	+	+	+	-	+	+	GF7	+	+	-	-	+	+	+	+	OL1	+	-	-	-	-	-	-	-
Manzano INIVIT	Silk/AAB	-	-	-	-	-	-	-	-	-	-	-	+	-	+	-	+	+	-	OL2*	-	-	-	-	-	-	-	-
FHIA 21	FHIA/AAAB	+	+	+	+	+	+	-	+	+	GF7	+	+	-	-	+	+	+	+	OL1	+	-	-	-	-	-	-	-
FHIA 20	FHIA/AAAB	+	+	+	+	+	+	-	+	+	GF7	+	+	-	-	+	+	+	+	OL1	+	-	-	-	-	-	-	-
FHIA 18	FHIA/AAAB	+	+	+	+	+	+	+	+	+	GF7/GF9	?	+	-	+	+	+	+	+	OL1/OL2*	?	-	-	-	-	-	-	-
FHIA 01	FHIA/AAAB	+	+	+	+	+	+	+	+	+	GF7/GF9	?	+	-	+	+	+	+	-	OL1/OL2*	?	-	-	-	-	-	-	-
FHIA 03	FHIA/AABB	+	+	+	+	+	+	+	+	+	GF7/GF9	-	+	+	+	-	+	+	-	OL2*/OL2*	-	+	+	+	+	+	Im/Im	-
FHIA 25	FHIA/AAB	+	+	+	+	+	+	+	+	+	GF7/GF9	?	+	-	-	-	+	+	-	OL*	?	+	+	+	+	+	Im	+
PKW (c+)	*M. balbisiana*/BB	+	+	+	+	+	+	+	+	+	GF7/GF9	-	+	+	+	+	+	+	+	OL1/OL2	-	+	+	+	+	+	Im/Im	-
Gran enano (c-)	Cavendish/AAA	-	-	-	-	-	-	-	-	-	-	-	-	-	-	-	-	-	-	-	-	-	-	-	-	-	-	-

GF7: eBSGFV-7 allele; GF9: eBSGFV-9 allele; OL1: eBSOLV-1 allele; OL2: eBSOLV-2 allele; OL2*: modified OL2 allele; OL*: unidentified eBSOLV allele; Im: eBSImV sequence; -: absence of amplification product; +: presence of an amplification product of the expected size; PKW: Pisang Klutuk Wulung cultivar; (c+): positive control; (c-): negative control.

The present study shows that most interspecific hybrids and cultivars grown in Cuba, harbor infectious alleles of at least two of the three BSV species BSOLV, BSIMV and BSGFV. Previous studies carried out in several plant species hosting endogenous viral elements (EVEs), suggest that the loci containing EVEs are transcriptionally silenced [Mette *et al.*, 2002; Kunii *et al.*, 2004; Noreen *et al.*, 2007; Staginnus *et al.*, 2007; Becher *et al.*, 2014; Duroy *et al.*, unpublished]. In the particular case of infectious EVEs, including alleles OL1 and GF7 and eBSImV sequence of PKW, it has been hypothesized that infection occurs upon the release of silencing by exposure of the plant to biotic or abiotic stresses, such as tissue culture micropropagation and interspecific plant hybridization [Teycheney & Geering, 2011]. In banana, such activation is documented in interspecific hybrids and cultivars harboring one copy of the *M. balbisiana* genome [Dallot *et al.*, 2001; Côte *et al.*, 2010], but does not seem to be of concern in ABB and AABB genotypes [Chabannes & Iskra Caruana, 2013]. Therefore, among the interspecific hybrids and cultivars studied in this work, triploid AAB varieties Macho ¾ and CEMSA ¾, triploid (AAB) hybrid FHIA 25 and tetraploid (AAAB) hybrids FHIA-20 and FHIA-21, which share similar eBSV patterns, seem to be the only ones at risk of becoming infected by BSVs following activation of infectious eBSVs (*Table 3*). In fact BSOLV and BSIMV were reported in FHIA 21 and FHIA 25, respectively, in several growing areas in Cuba [Javer *et al.*, 2009], raising suspicion that these infections might have occurred following the activation of infectious eBSVs.

Tetraploid (AAAB) hybrids FHIA 18 and FHIA 01 displayed modified eBSOLV and eBSGFV alleles, which are not currently documented as far as their infectivity is concerned. It is therefore not possible at this stage to foresee if these modified alleles could lead to spontaneous BSV infections upon activation. On the opposite, none of these two hybrids host eBSImV. Among all the cultivars analyzed in our work, Manzano INIVIT is the only one devoid of infectious eBSGFV and eBSImV and harbors a modified eBSOLV allele for which it is not known whether it is infectious or not.

The cultivars and accessions genotyped in this study are used for fruit production and also as valuable sources for disease resistance and agronomic traits of interest in Cuba national banana breeding program. Thus, the molecular characterization of their eBSVs is instrumental for the identification of suitable cultivars and genitors minimizing the risk of spreading BSVs through the cultivation and/or breeding of interspecific hybrids. Our work showed that tools and methodologies are available for achieving this characterization, although additional work is needed to characterize modified eBSOLV alleles and to determine under which conditions and for which cultivars infectious alleles are activated at field level.

Acknowledgment

This work was supported by the Guadeloupe Region through the Fonds de Coopération Régionale program and by the French Embassy in Cuba.

References

Bakry F.; F. Carreel, J.P., Horry; C., Jenny; K., Tomekpe «La diversité génétique des bananiers cultivés : situation actuelle et perspectives» *Le Sélectionneur Français*, (55), 33-41, France, 2005.

Becher H., Ma L., Kelly L.J., Kovarik A., Leitch I.J., Leitch A.R.: «Endogenous pararetrovirus sequences associated with 24 nt small RNAs at the centromeres of *Fritillaria imperialis* L. (*Liliaceae*), a species with a giant genome», *Plant Journal* 80:823-833, 2014.

Chabannes, M.; F. C. Baurens; P. O. Duroy; S. Bocs; M. S. Vernerey; M. Rodier-Goud; V. Barbe; P. Gayral; M. L. Iskra-Caruana: «Three infectious viral species lying in wait in the banana genome», *Journal of Virology* 87: 8624-8637, USA, 2013.

Côte, F. X.; S. Galzi; M. Folliot; Y. Lamagnère; P.Y. Teycheney; M.L. Iskra-Caruana: «Micropropagation by tissue culture triggers differential expression of infectious endogenous *Banana streak virus* sequences (eBSV) present in the B genome of natural and synthetic interspecific banana plantains», *Molecular Plant Pathology* 11: 137-144, United Kingdom, 2010.

Dallot, S.; P. Acuña; C. Rivera; P. Ramírez; F. Côte; B. E. L. Lockhart; M. L., Iskra-Caruana: «Evidence that the proliferation stage of micropropagation procedure is determinant in the expression of *Banana streak virus* integrated into the genome of the FHIA 21 hybrid (Musa AAAB)», *Archives of Virology* 146: 2179-2190, Austria, 2001.

D'Hont, A.; D. Denoeud; J.M. Aury *et al.*: «The banana (Musa *acuminata*) genome and the evolution of monocotyledonous plants», *Nature*. 488: 213-217, USA, 2012.

Duroy, P.O: «What are the deals during the evolution resulting in the preservation of virus in the genome of plants?», PhD Thesis in Plant integrated biology, Doctoral school of SIBAGNHE, University of Montpellier II Sciences and Techniques of Languedoc, Montpellier, p. 209, France, 2012.

Gayral, P.; J. C. Noa-Carrazana; M. Lescot; F. Lheureux; B. E. L. Lockhart; T. Matsumoto; P. Piffanelli; M.L. Iskra-Caruana: «A single *Banana streak virus* integration event in the banana genome as the origin of infectious endogenous pararetrovirus», *Journal of Virology* 82: 6697-6710, USA, 2008.

Gayral, P.; L. Blondin; O. Guidolin; F. Carreel; I. Hippolyte; X. Perrier; M.-L. Iskra-Caruana: «Evolution of endogenous sequences of *Banana streak virus*: What can we learn from banana (*Musa* sp.) evolution?», *Journal of Virology* 84: 7346-7359, USA, 2010.

Gawel, N.J.; R.L Jarret: «A modified CTAB DNA extraction procedure for Musa and Ipomoea», *Plant Molecular Biology Rep*. 9: 262-266, USA, 1991.

Harper, G.; R. Hull; B. E. L. Lockhart; N. Olszewski: «Viral sequences integrated into plant genomes», *Annual Review of Phytopathology* 40: 119-136, USA, 2002.

Hohn, T.; K. R. Richert-Poggeler; G. Harper; T. Schawarzacher; C. Teo; P.Y. Teycheney; M.L. Iskra-Caruana; R. Hull: «Evolution of integrated plant viruses», *Plant Virus Evolution*, Academic Springers, Heidelberg, Germany, 2008.

Iskra-Caruana, M.L.; F.C. Baurens; P. Gayral; M. Chabannes: «A Four-Partner Plant-Virus Interaction: Enemies Can Also Come from Within» *Molecular Plant-Microbe Interactions* 23 (11): 1394–1402, USA, 2010.

Javer-Higginson, E.; I. Acina-Mambole; I. Quiala; C. Font; G. González; A.L. Echemendía; E. Muller; P.-Y Teycheney: «First report of *Banana streak virus* species Goldfinger, Imové, Mysore and Obino l'Ewaï in *Musa* spp in Cuba», *Plant Pathology* 58: 787, USA, 2009.

Kunii, M.; Kanda, M.; Nagano, H.; Uyeda, I.; Kishima, Y.;Y. Sano: «Reconstruction of putative DNA virus from endogenous rice tungro bacilliform virus-like sequences in the rice genome: implications for integration and evolution», *BMC Genomics* 5:14, United Kingdom, 2004.

Lheureux, F.; F. Carreel; C. Jenny; B. E. L., Lockhart; M. L., Iskra-Caruana: «Identification of genetic markers linked to banana streak disease expression in interspecific *Musa* hybrids», *Theoretical Applied Genetics* 106: 594-598, Germany, 2003.

Lockhart, B.E.L; N.E. Olszewski: «Serological and genomic heterogeneity of *Banana streak badnavirus*: implications for virus detection in *Musa* germplasm», *Breeding banana and plantain for resistance to diseases and pests,* CIRAD, France, 1993.

Lockhart, B. E. L.; D. R. Jones: «Banana Mosaic», *Diseases of Banana Abaca and Enset,* CABI International Wallingford, United Kingdom, 2000.

Mette, M.F.; Kanno, T.; Aufsatz, W.; Jakowitsch, J.; Van der Winden, J.; Matzke, M.A.; A.J.M. Matzke: «Endogenous viral sequences and their potential contribution to heritable virus resistance in plants», *EMBO Journal* 21:461-469, Germany, 2002.

Meyer, J. B.; Kasdorf, G. F.; Nel, L .H.; G. Pietersen: «Transmission of activated episomal Banana streak OL (badna)virus (BSOLV) to cv. Williams banana (Musa sp.) by three mealybug species», *Plant Disease* 92:1158-1163, USA, 2008.

Noreen, F.; Akbergenov, R.; Hohn, T.; K.R. Richert-Poggeler: «Distinct expression of endogenous Petunia vein clearing virus and the DNA transposon dTph1 in two Petunia hybrida lines is correlated with differences in histone modification and siRNA production», *Plant Journal* 50:219-229, USA, 2007.

Pérez-Vicente, L.: «La producción, investigación y desarrollo en musáceas en Cuba», Bulletin *MUSALAC*, 2(2): 6-9, France, 2011.

Staginnus, C.; Gregor, W.; Mette, M.F.; Teo, C.; Borroto-Fernández, E.; Machado, M.L.; Matzke, M.; T. Schwarzacher: «Endogenous pararetroviral sequences in tomato (*Solanum lycopersicu*m) and related species», *BMC Plant Biology* 7:24, United Kingdom, 2007.

Teycheney, P. Y.; A.D.W Geering: «Endogenous viral sequences in plant genomes», *Recent Advances in Plant Virology*, Norfolk:Academic Press, England, 2010.